5400 HTP SERIES

HIGH THERMAL PERFORMANCE FLUSH GLAZE SYSTEM

FEATURES

- 2” wide profile
- Glass reinforced thermal break allows for exceptionally high thermal performance without affecting the structural integrity of the system
- Mullion depths available: 2-3/4”, 4”, 5”
- Overall system depth to be 2-1/4” deeper than mullion depth for double glaze and 3” for triple glazed
- Capped glazing and SSG configurations available
- Pressure equalized internal drainage (applies to capped mullions only)
- Multiple anchoring methods available including ‘F’ and ‘T’ sleeve anchors
- Optional integrated trim system

COMPATABILITY

Compatible with all Windspec Doors:

- HTP doors (high thermal performance)
- Standard Commercial doors
- Exposed and Flush door adapters available

Compatible with most Windspec operable windows:

- 535 projecting vents (Awning, Hopper, Casement)
- 575 frameless projecting vents (Awning, Casement)
- 720 side slider
- 740 single and double hung
- 3-1/4” louver system
- 2-1/4” bypass louver system

ADAPT | INNOVATE | DELIVER

WINDSPEC INC. 1310 CREDITSTONE RD. CONCORD, ON L4K 5T7 • TEL: 905-738-8311 • WINDSPEC.COM

5400 HTP SERIES

TABLE OF CONTENTS

TYPICAL 5400 HTP SERIES C.W. DETAILS (D.G.) 003
TYPICAL 5400 HTP/SSG C.W. DETAILS (D.G.) 005
HTP DOOR IN 5400 HTP SERIES C.W. (D.G.) 007
535 PROJECT-OUT VENT IN 5400 HTP C.W. (D.G.) 009
535 PROJECT-IN VENT IN 5400 HTP C.W. 010
575 PROJECT-OUT VENT IN 5400 HTP C.W. (D.G.) 011
TYPICAL CORNER DETAILS (D.G.) 014
TYPICAL CORNER DETAIL WITH CORNER MULLION (D.G) 016
TYPICAL CORNER DETAIL WITH CORNER MULLION 017
VENEER MULLION DETAIL 019
TYPICAL 5400 HTP SERIES C.W. DETAILS (T.G.) 021
HTP DOOR IN 5400 HTP C.W. (T.G.) 025
535 PROJECT-OUT VENT IN 5400 HTP C.W. (T.G.) 033
535 PROJECT-IN VENT IN 5400 HTP C.W. (T.G.) 035
575 PROJECT-OUT VENT IN 5400 HTP C.W. (T.G). 037
575 PROJECT-OUT VENT IN 5400 HTP / SSG C.W. (T.G) 039
TYPICAL CORNER DETAILS (T.G.) 043
FOOT ANCHOR OPTIONS 047
WIND LOAD CHARTS 049
PARTS LIST 056
FOOT ANCHOR ASSEMBLY PARTS LIST 062

5400 HTP SERIES

TYPICAL 5400 HTP SERIES
C.W. DETAILS (D.G.)

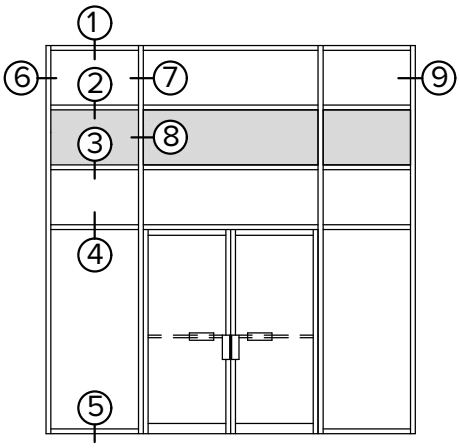

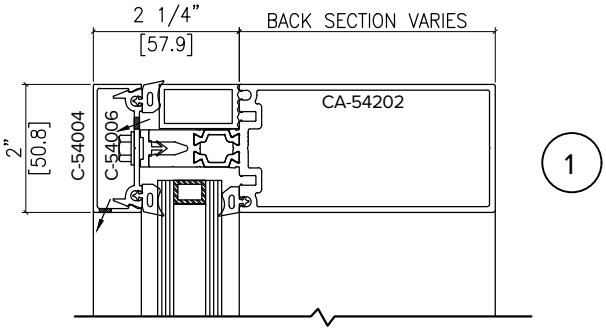

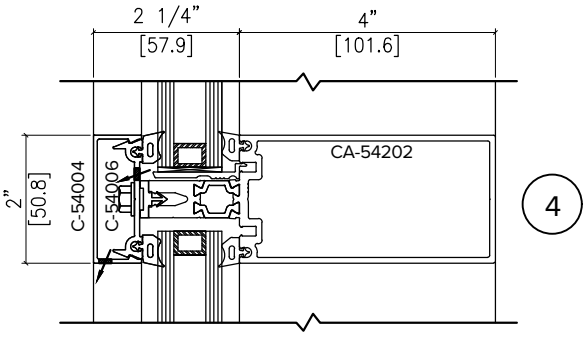

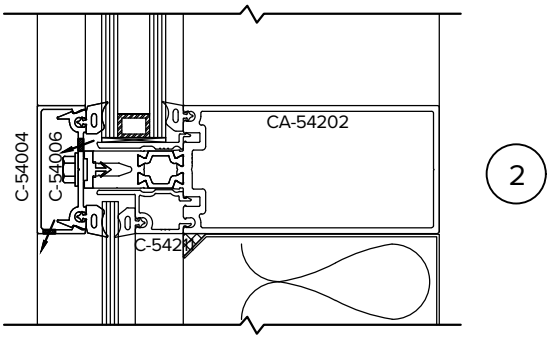

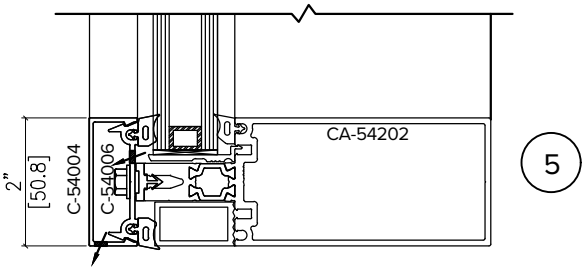

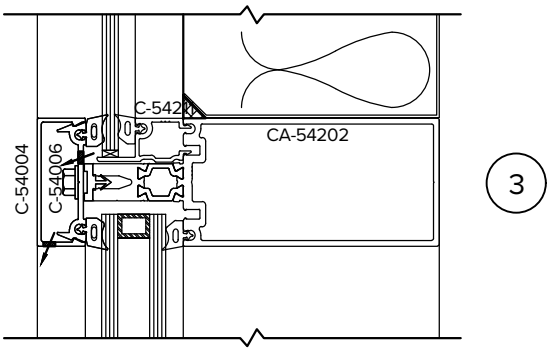

5400 HTP SERIES

TYPICAL 5400 HTP SERIES
C.W. DETAILS (D.G.)

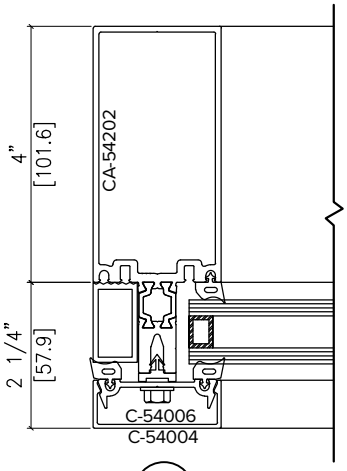

6

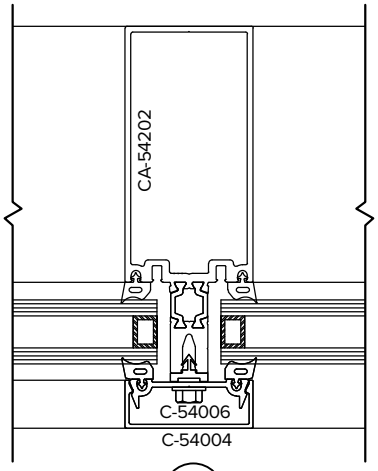

7

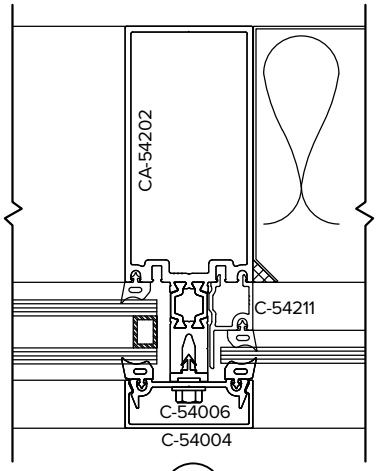

7a

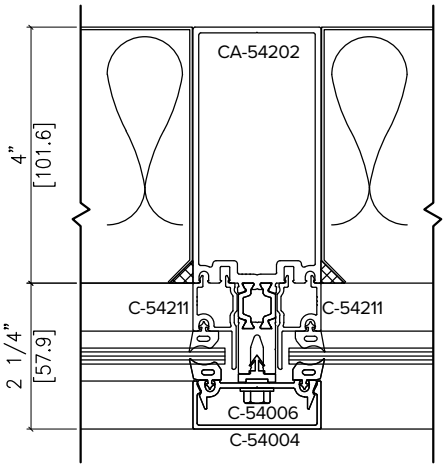

8

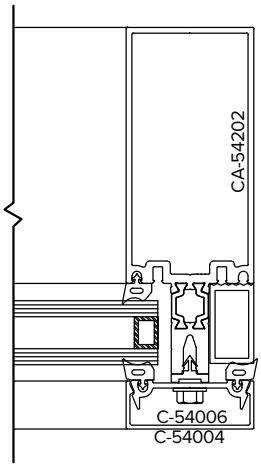

9

5400 HTP SERIES

TYPICAL 5400 HTP/SSG C.W. DETAILS (D.G.)

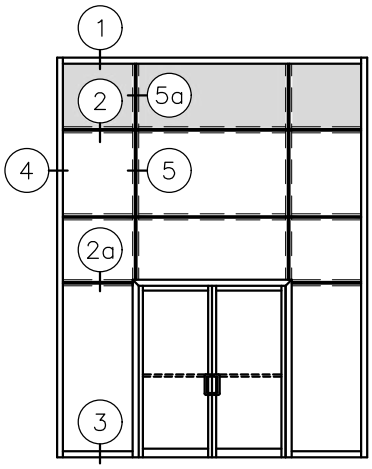

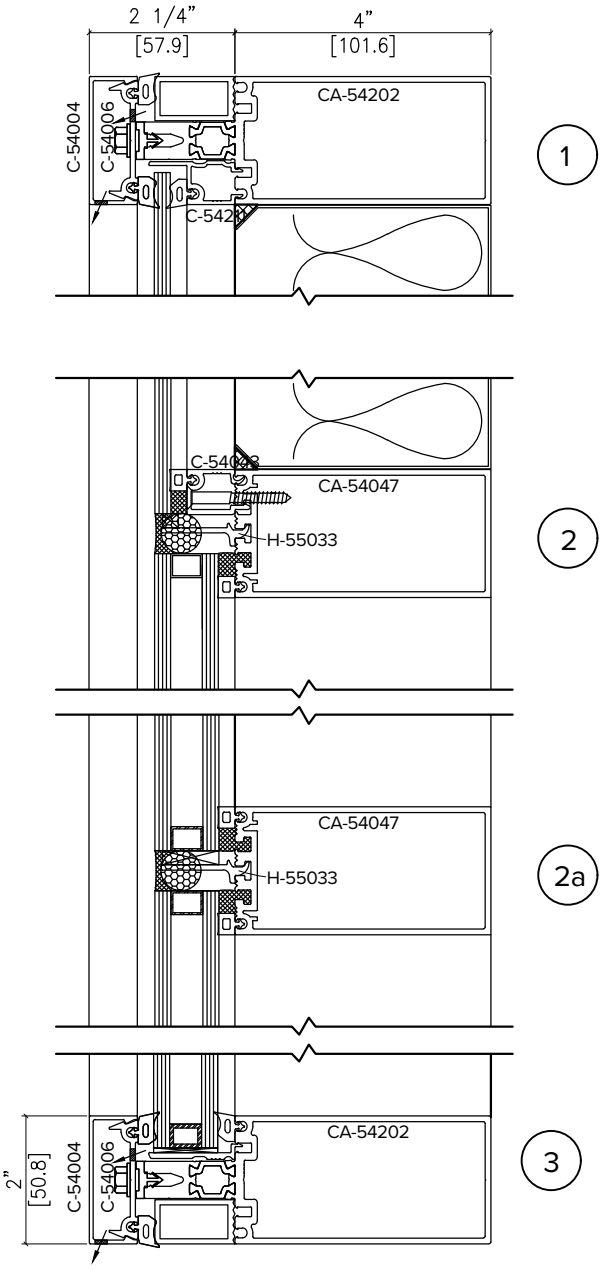

5400 HTP SERIES

TYPICAL 5400 HTP/SSG C.W. DETAILS (D.G.)

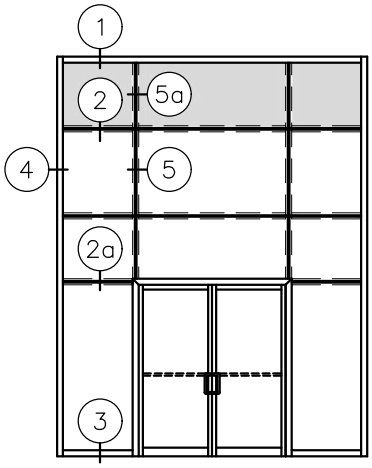

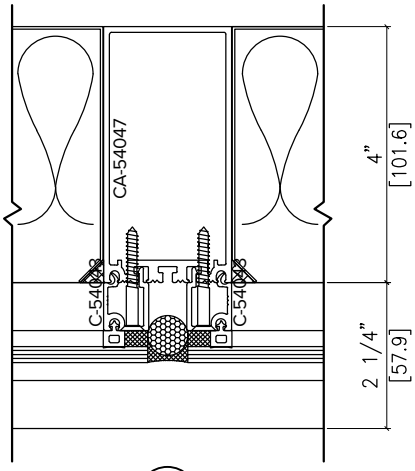

5a

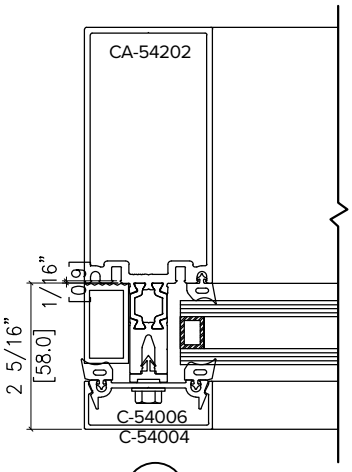

4

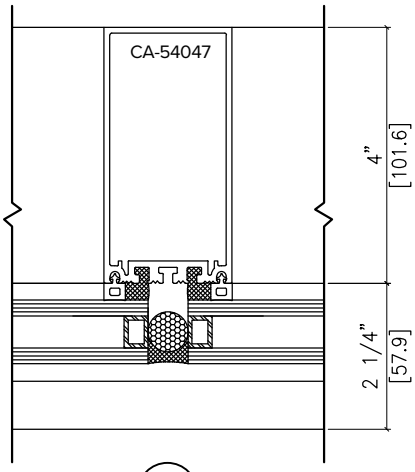

5

HTP DOOR IN 5400 HTP SERIES
C.W. (D.G.)

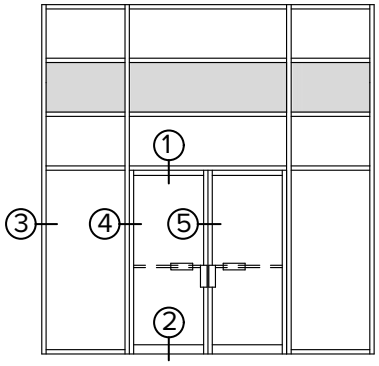

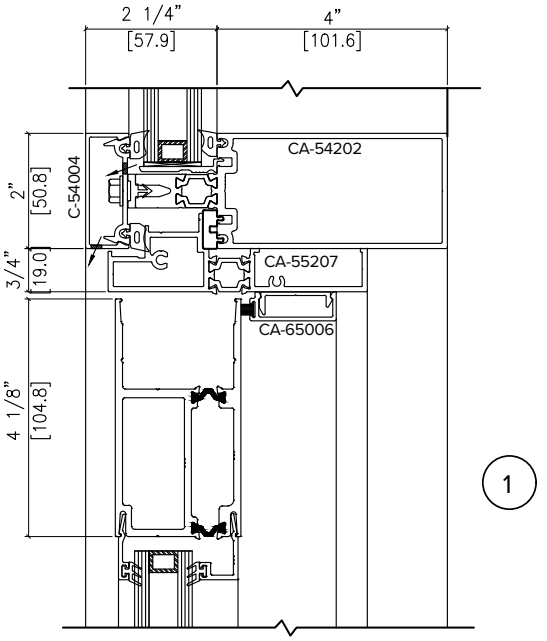

OPTION: H.T.P CURTAIN WALL FLUSH ADAPTOR

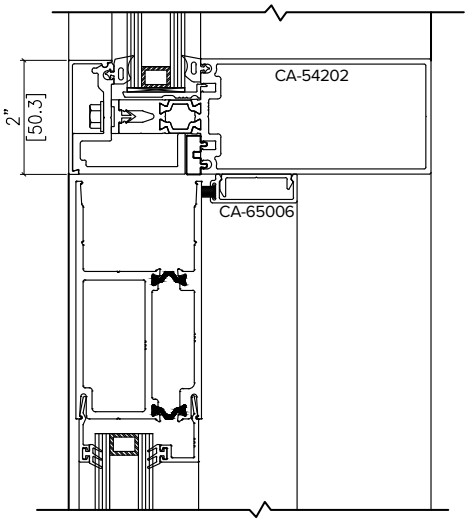

1a

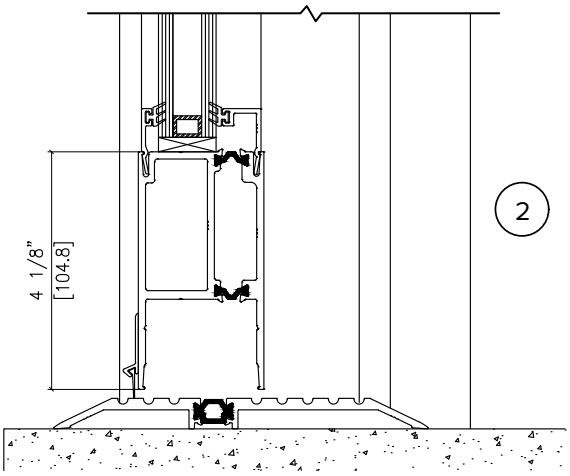

5400 HTP SERIES

HTP DOOR IN 5400 HTP SERIES
C.W. (D.G.)

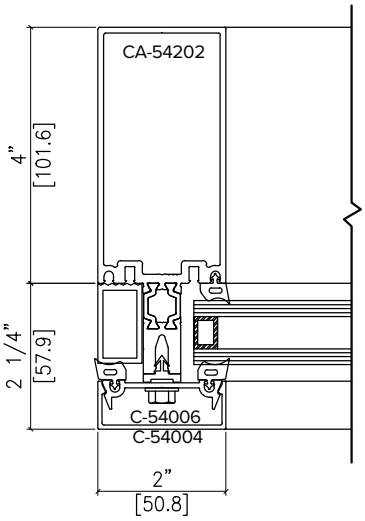

3

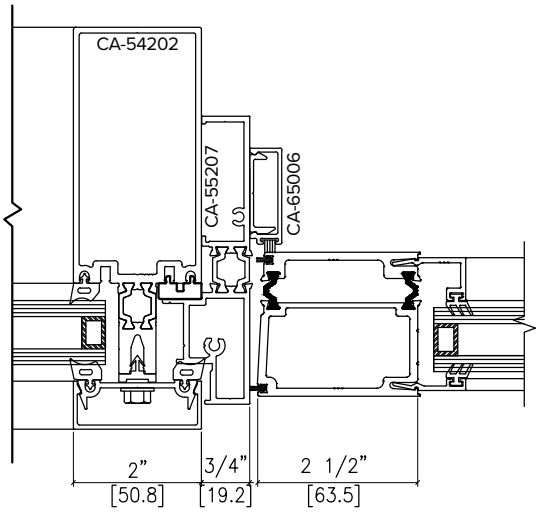

4

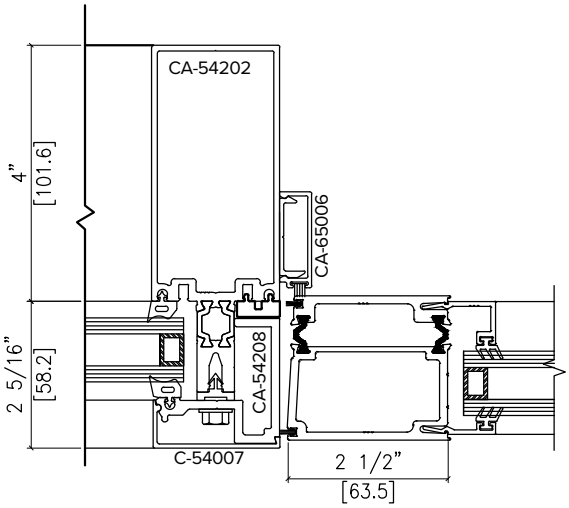

4a

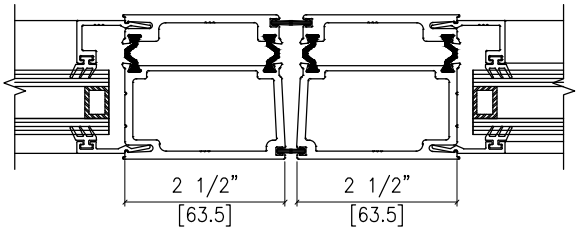

5

OPTION: H.T.P CURTAIN WALL
FLUSH ADAPTOR

5400 HTP SERIES

535 PROJECT-OUT VENT IN 5400 HTP C.W. (D.G.)

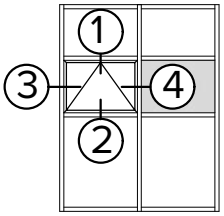

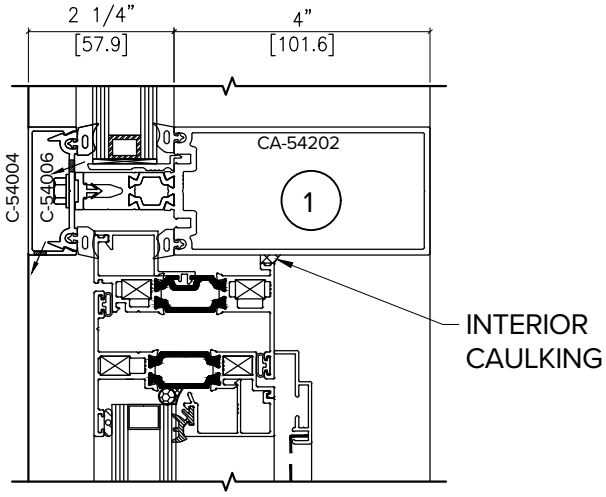

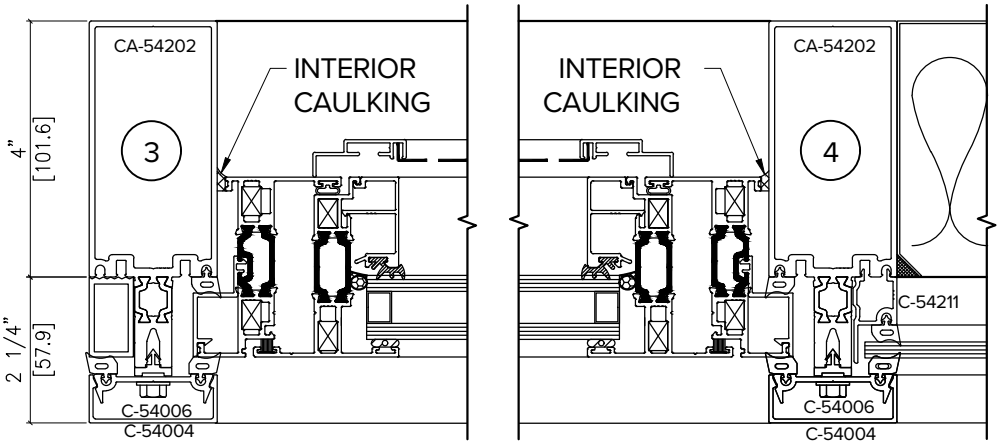

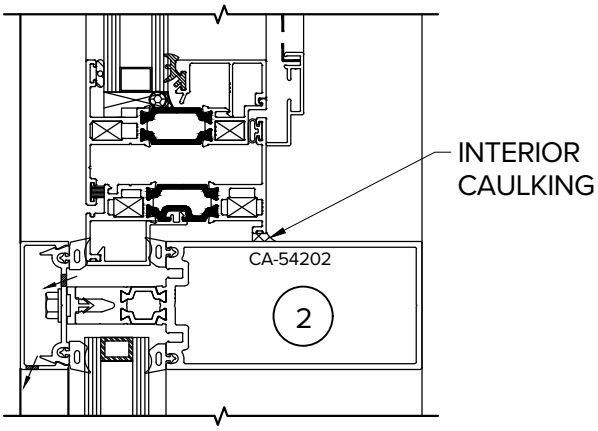

5400 HTP SERIES

535 PROJECT-IN VENT IN 5400 HTP C.W.

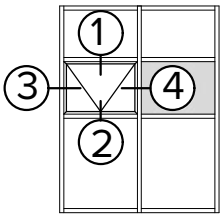

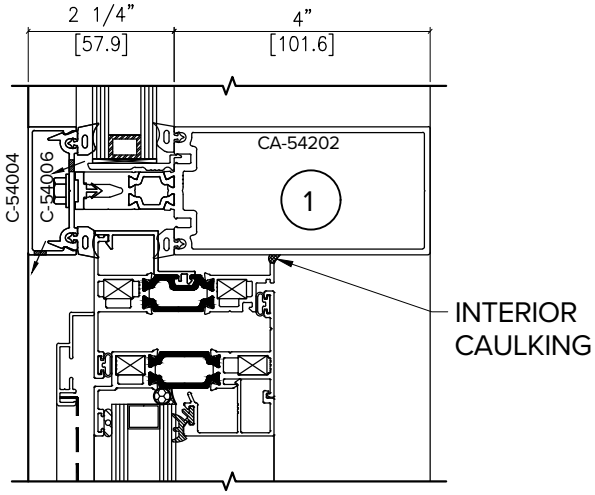

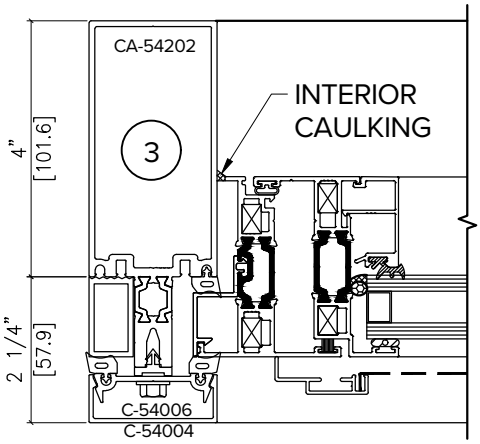

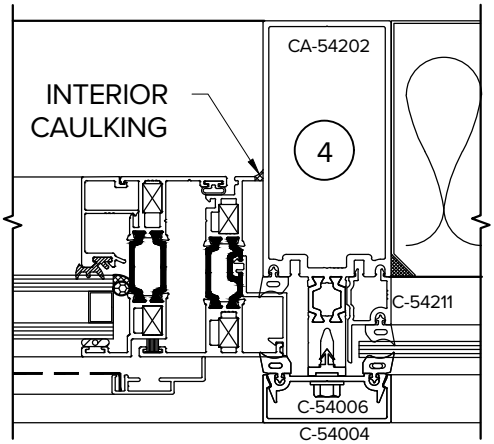

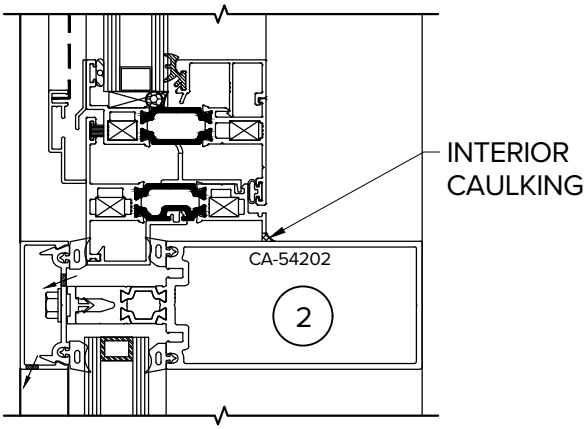

5400 HTP SERIES

575 PROJECT-OUT VENT IN 5400 HTP C.W. (D.G.)

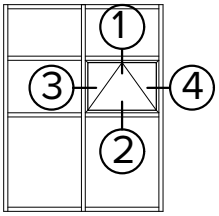

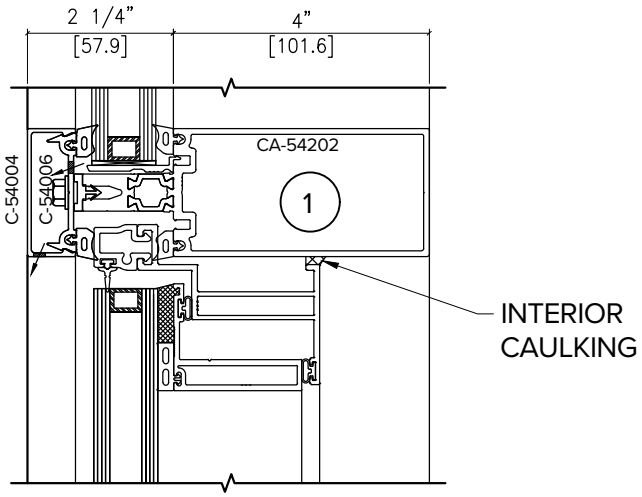

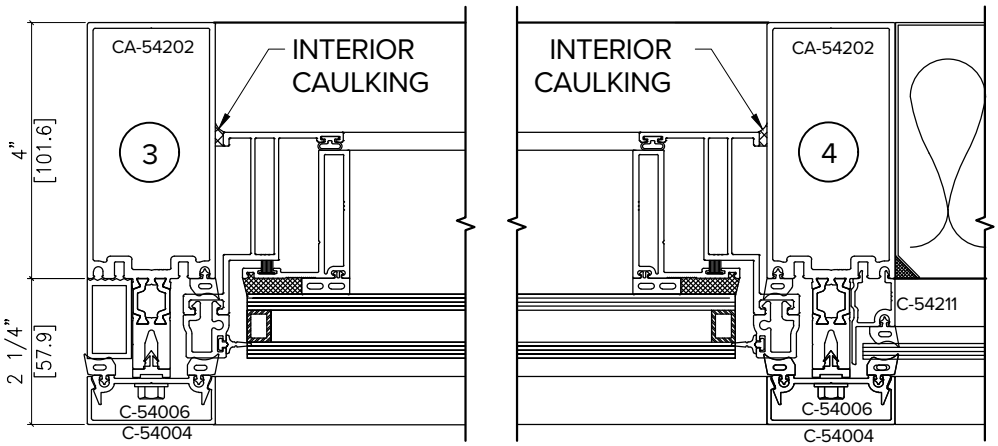

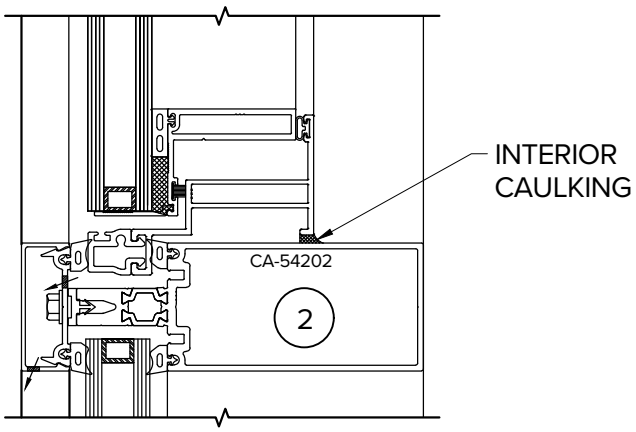

5400 HTP SERIES

575 PROJECT-OUT VENT IN 5400 HTP/SSG C.W.

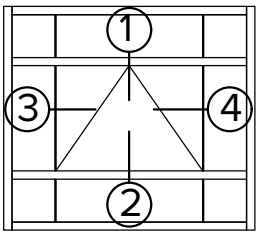

SSG VERTICAL ONLY

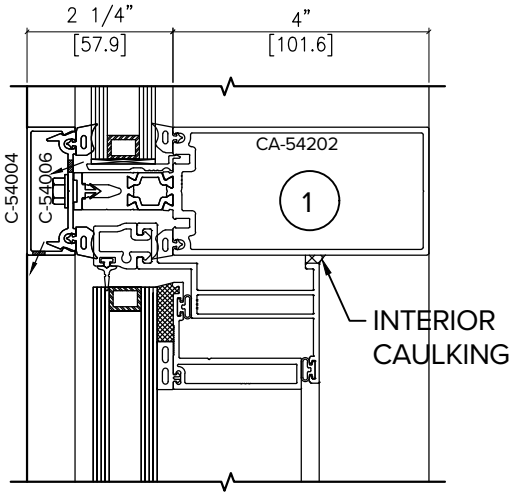

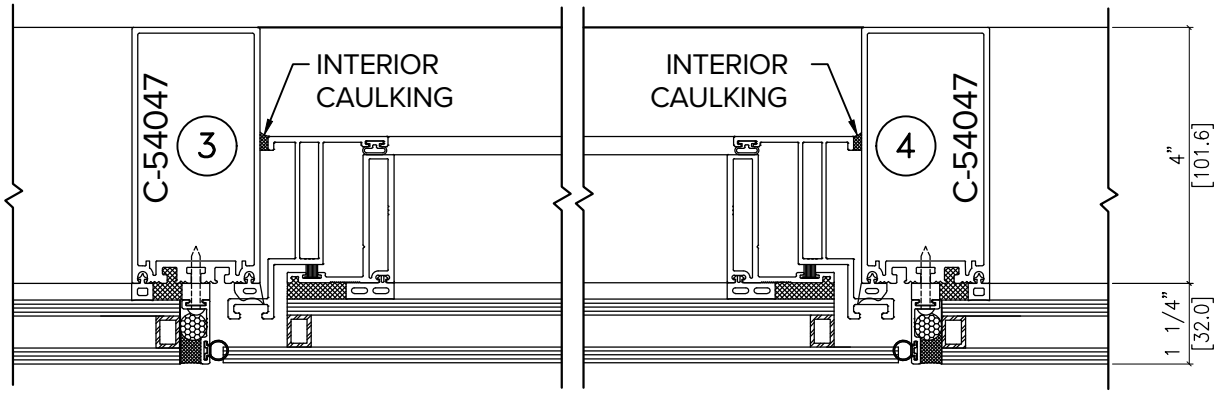

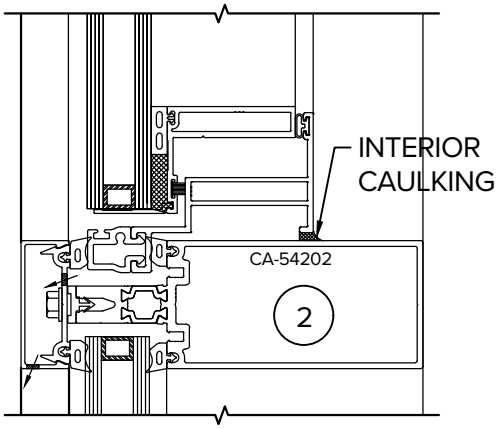

5400 HTP SERIES

575 PROJECT-OUT VENT IN 5400 HTP/SSG C.W. (D.G.)

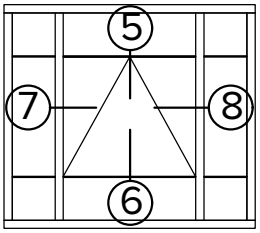

SSG HORIZONTAL ONLY

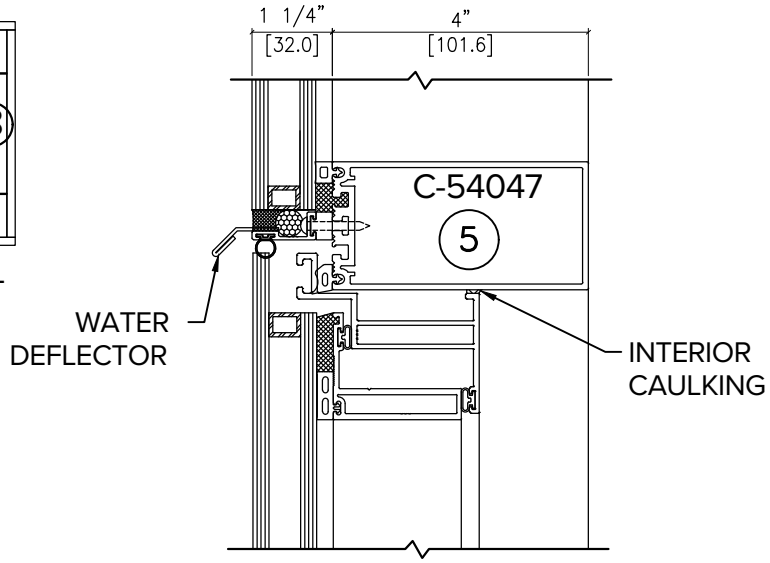

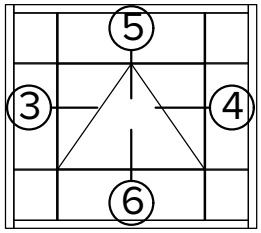

4 SIDED SSG

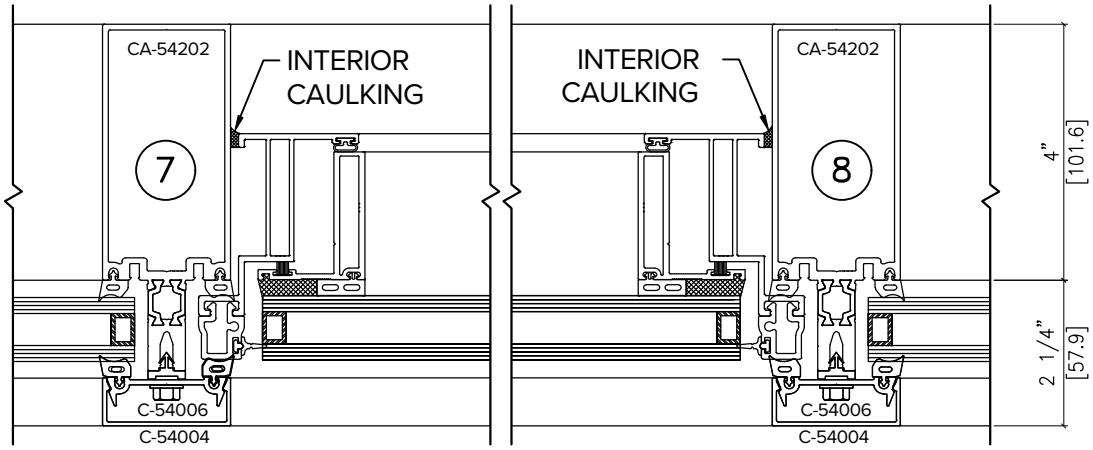

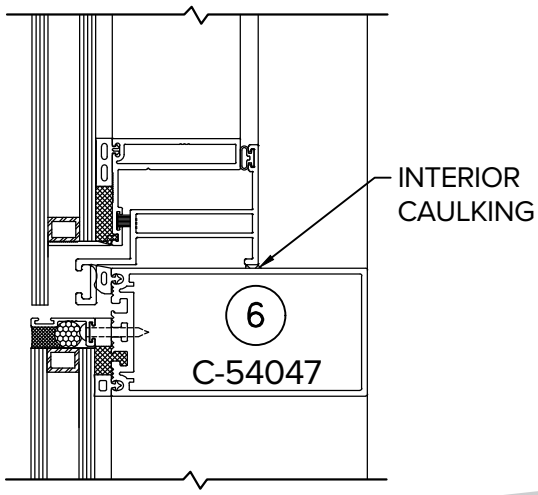

5400 HTP SERIES

TYPICAL CORNER DETAILS (D.G.)

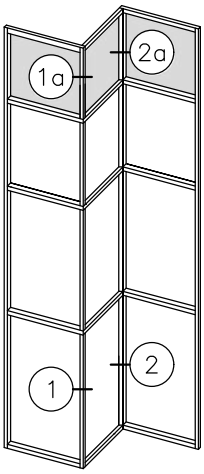

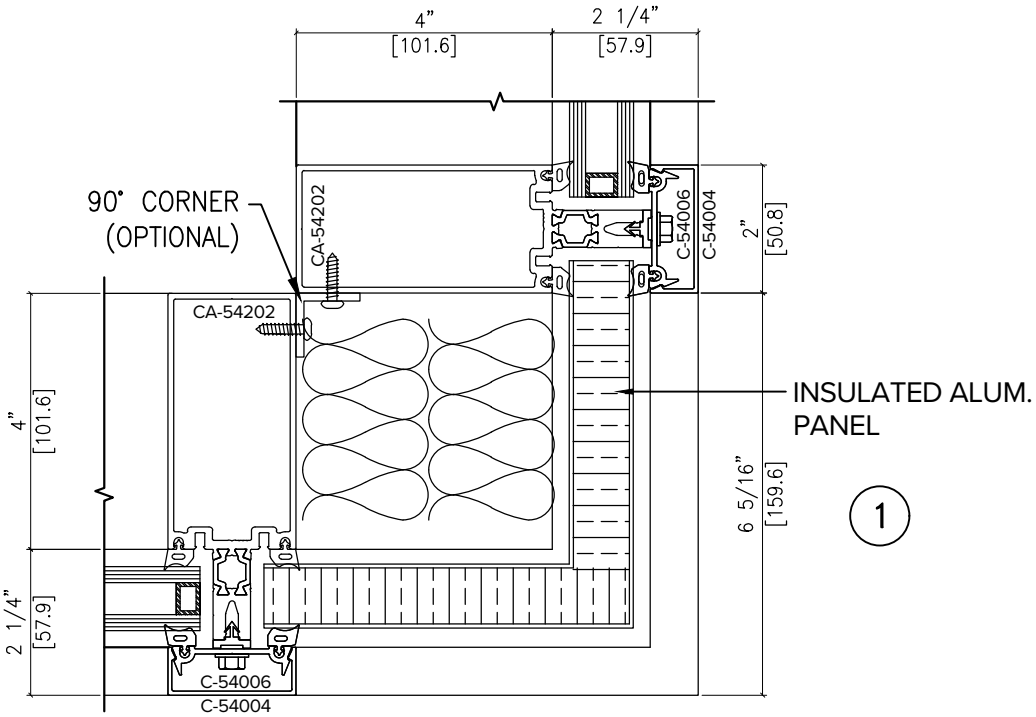

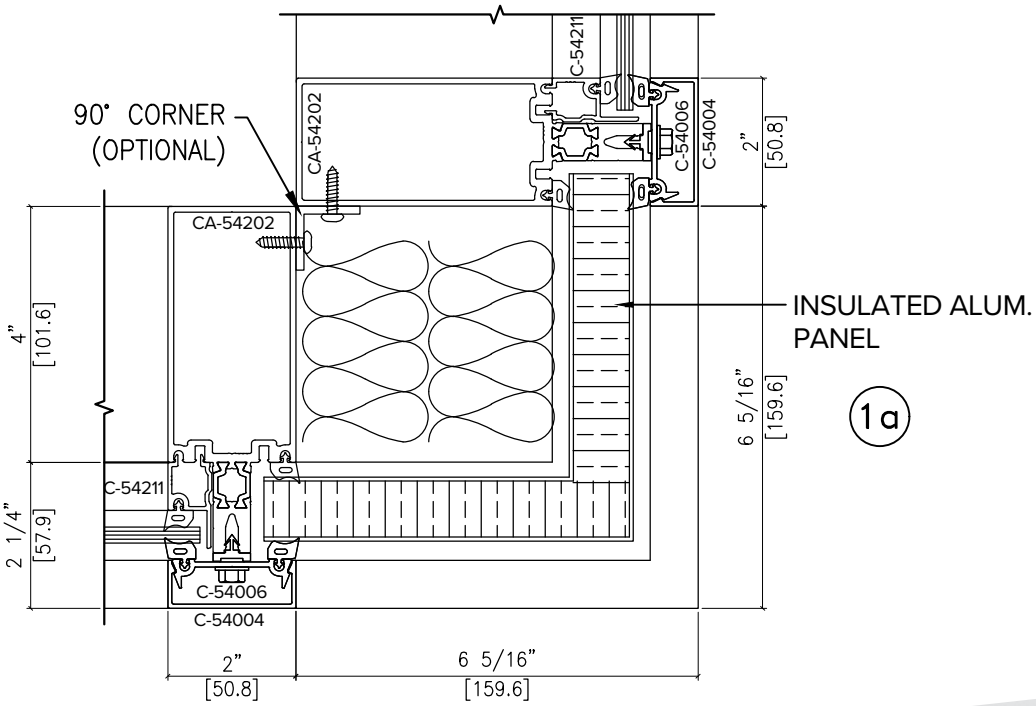

5400 HTP SERIES

TYPICAL CORNER DETAILS (D.G.)

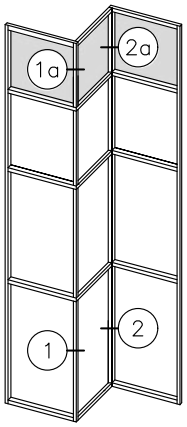

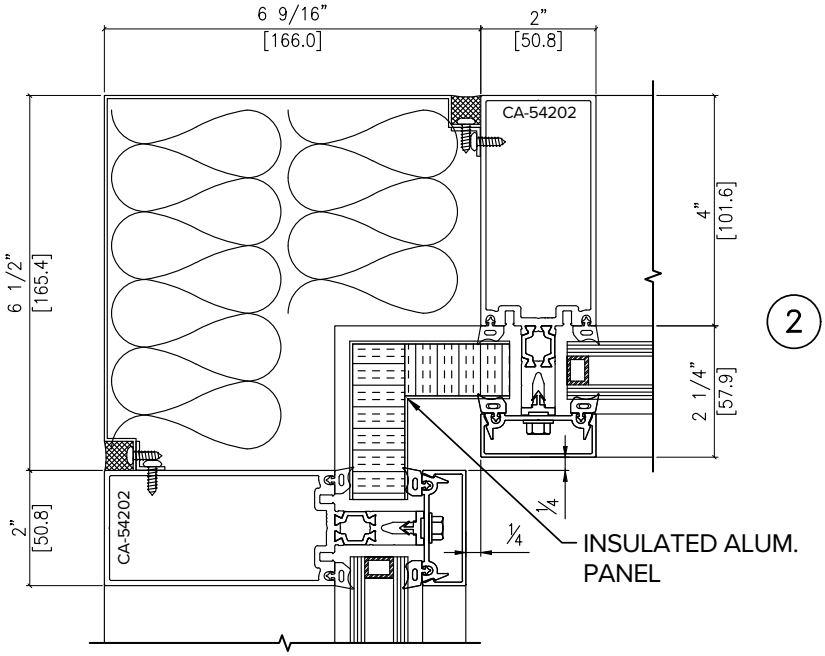

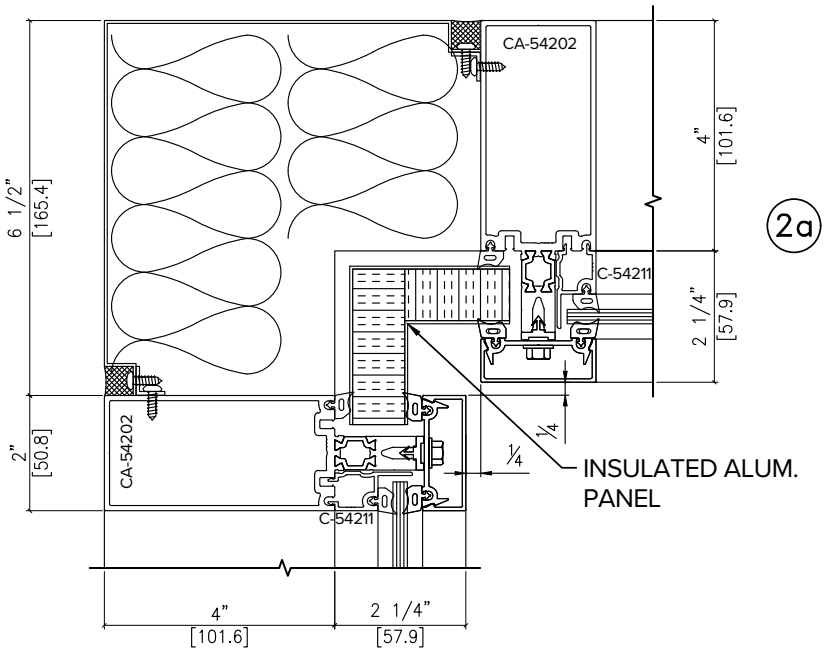

5400 HTP SERIES

TYPICAL CORNER DETAIL WITH CORNER MULLION (D.G)

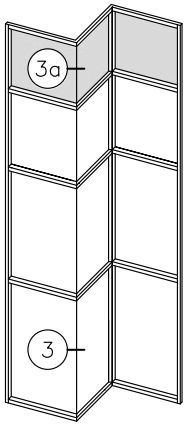

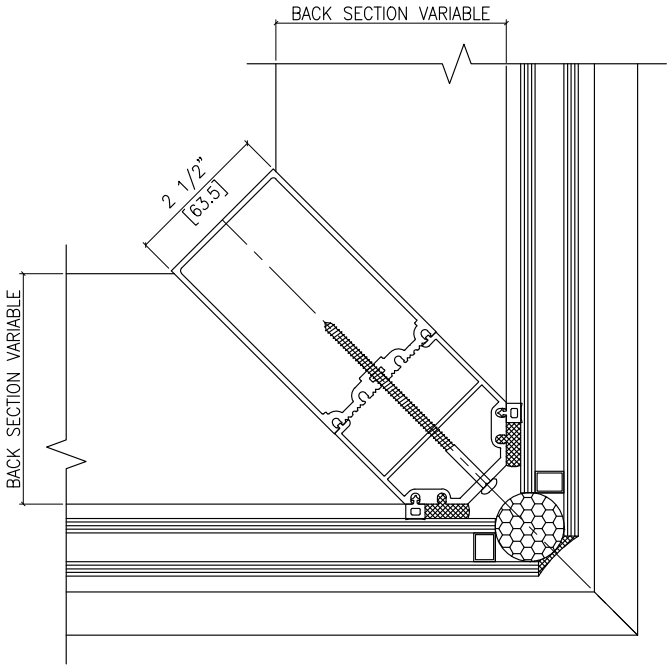

3

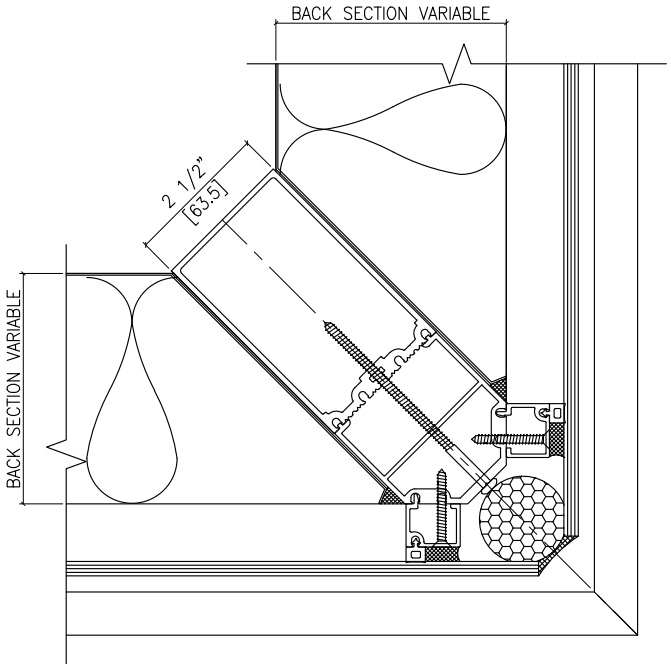

3a

5400 HTP SERIES

TYPICAL CORNER DETAIL WITH CORNER MULLION (D.G.)

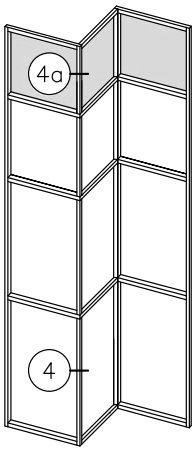

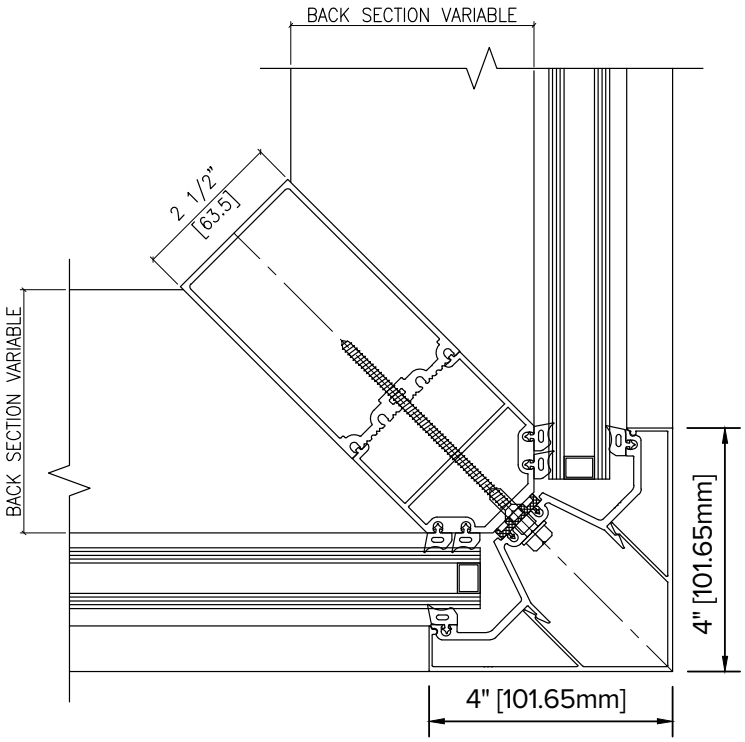

4

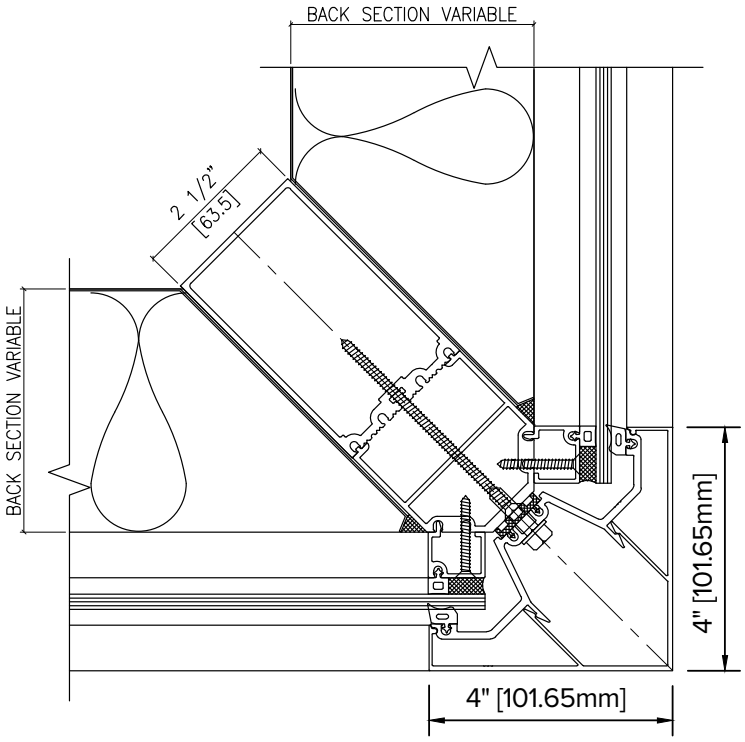

4a

5400 HTP SERIES

TYPICAL CORNER DETAIL WITH CORNER MULLION

Mullion (a)	Diagonal Mullion (b)	Adaptor (c)	Overhang (d)
2" x 2 $\frac{3}{4}$" CA-54201	2 $\frac{1}{2}$" x 2 $\frac{7}{8}$" C-55042	C-55016	0.71"
2" x 4" CA-54202	2 $\frac{1}{2}$" x 4" C-55047	C-55016	0.07"
2" x 5" CA-54203	2 $\frac{1}{2}$" x 5 $\frac{1}{4}$" C-55048	C-55009	0.47"

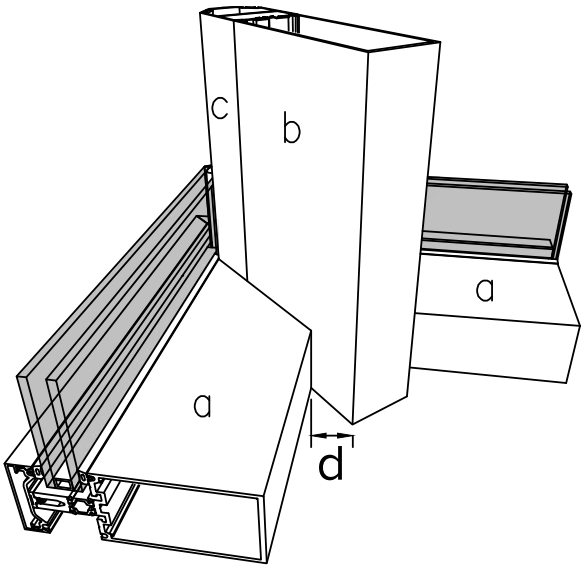

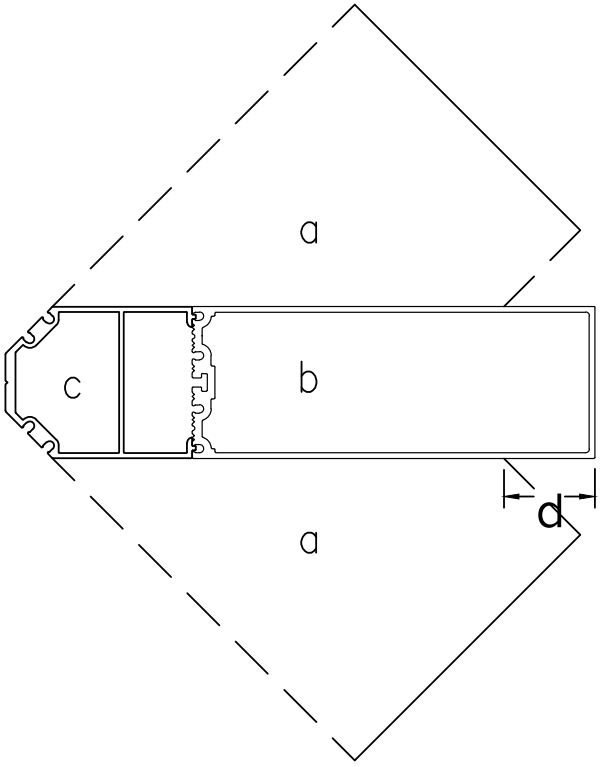

5400 HTP SERIES

VENEER MULLION DETAIL

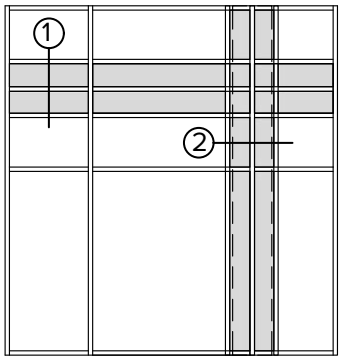

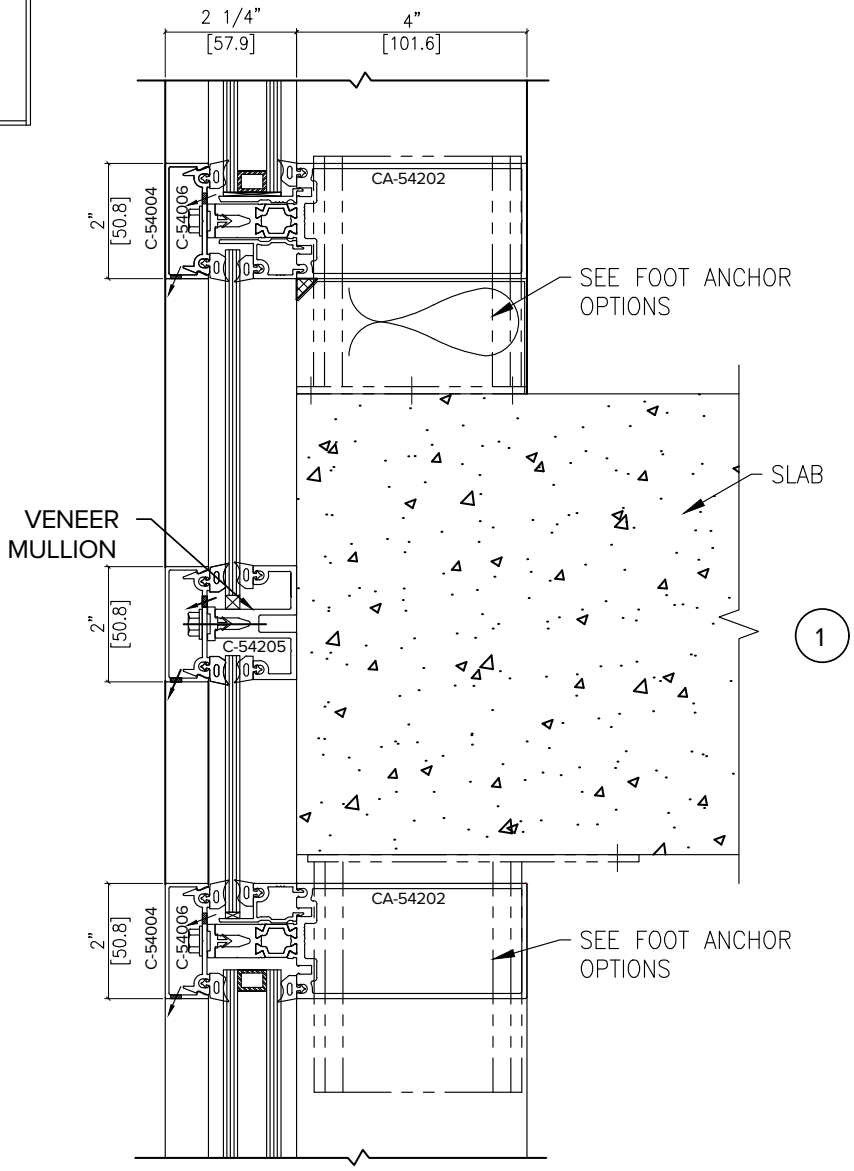

5400 HTP SERIES

VENEER MULLION DETAIL

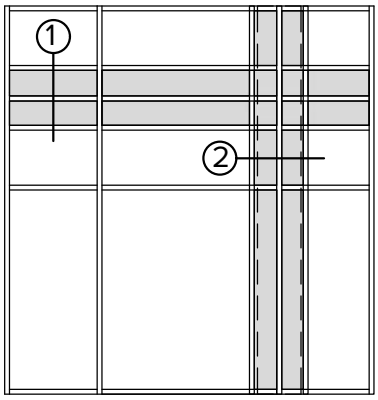

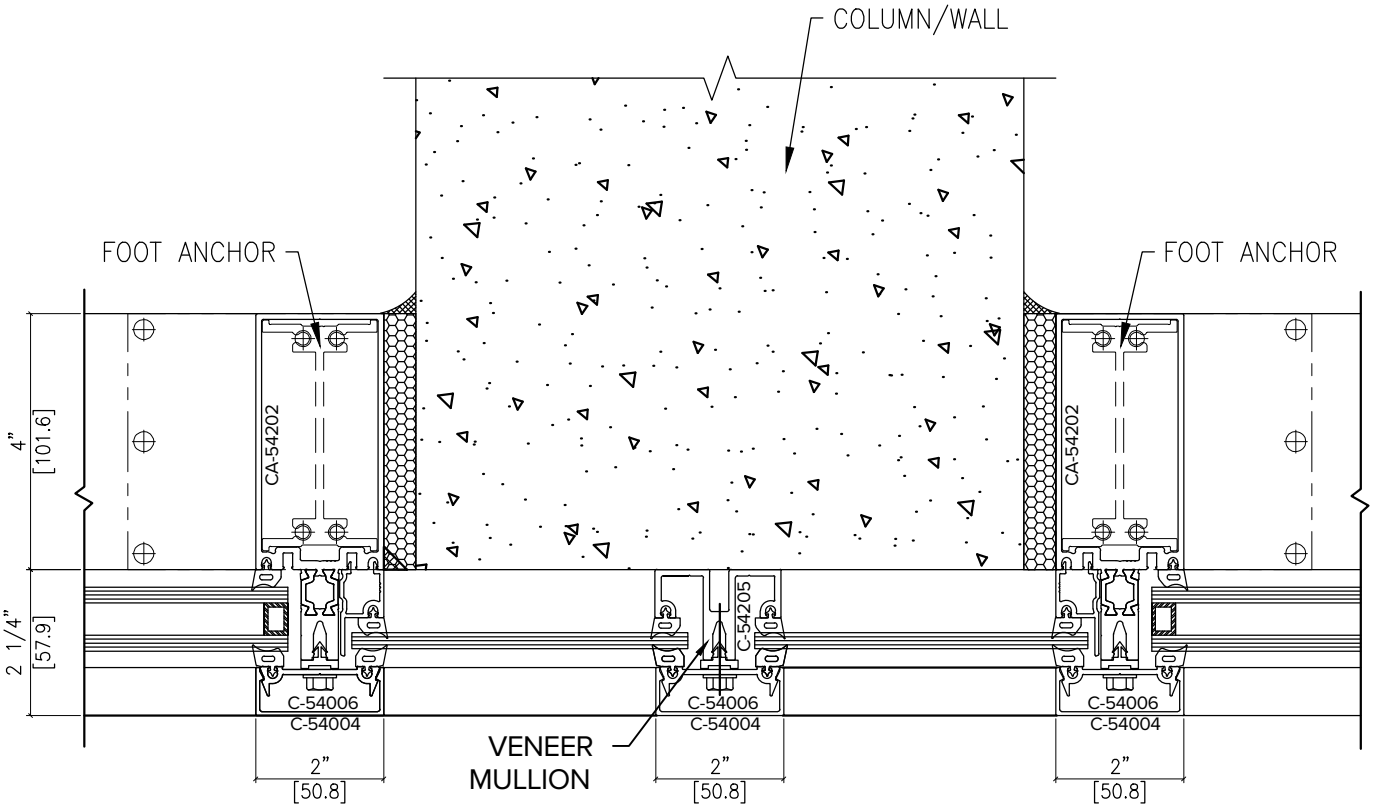

2

5400 HTP SERIES

TYPICAL 5400 HTP SERIES C.W. DETAILS (T.G.)

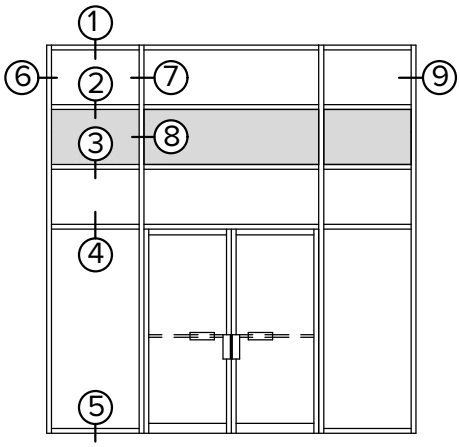

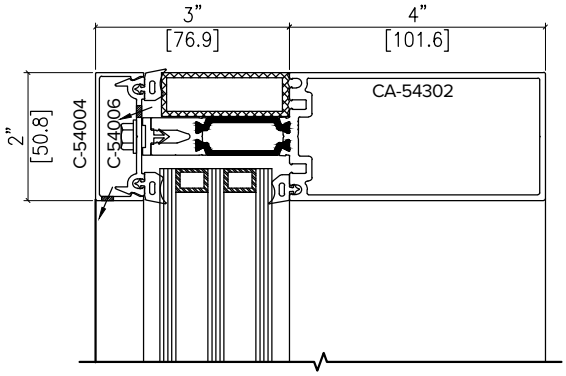

1

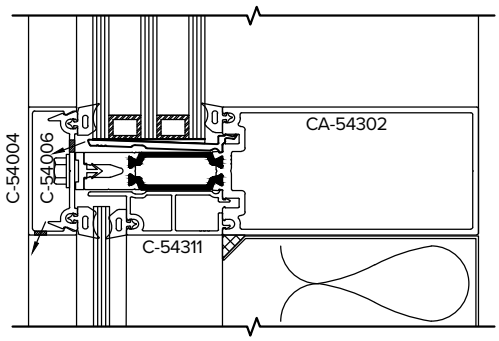

2

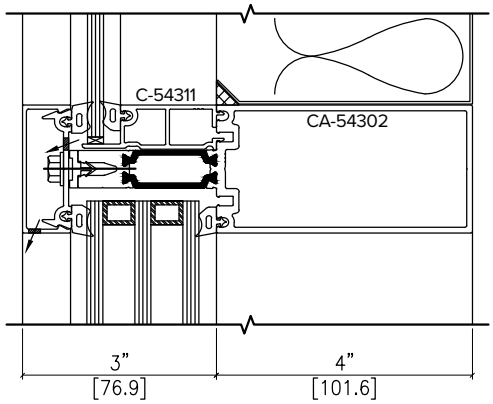

3

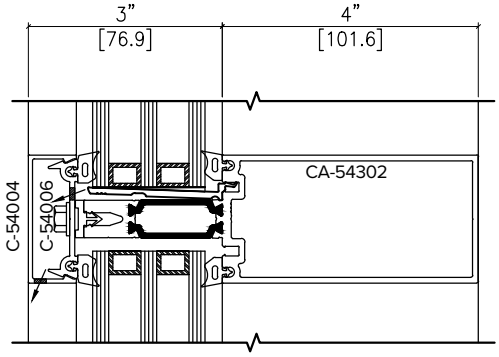

4

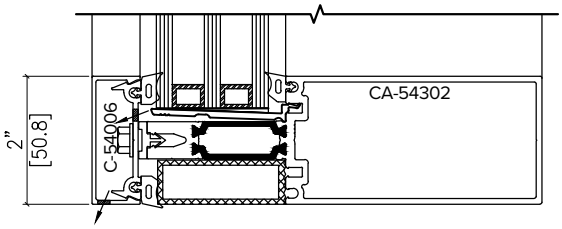

5

5400 HTP SERIES

TYPICAL 5400 HTP C.W. DETAILS (T.G.)

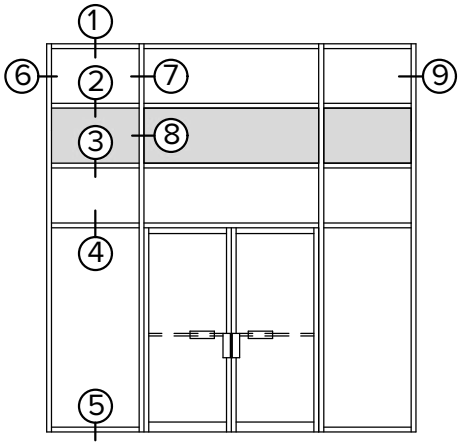

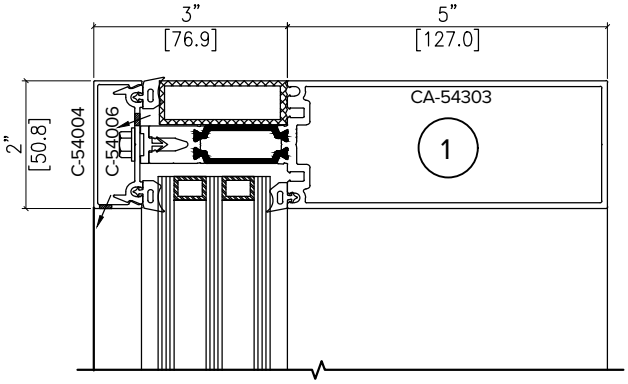

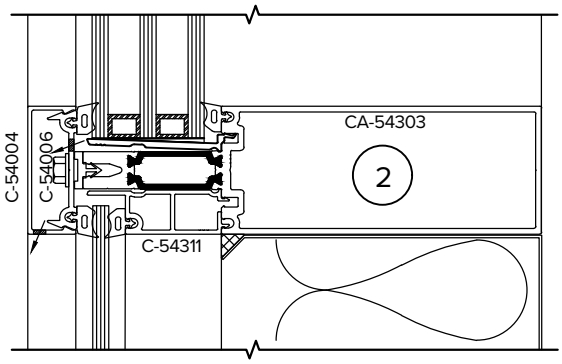

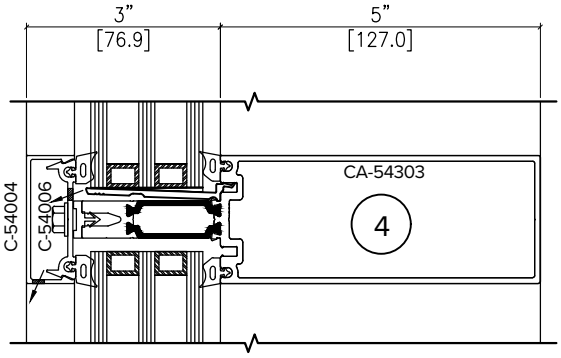

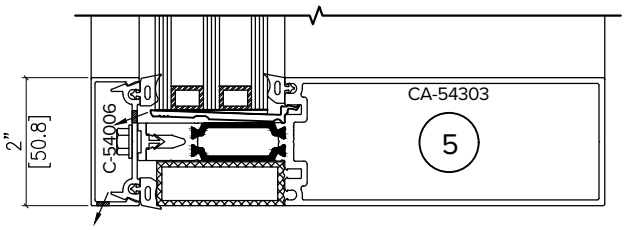

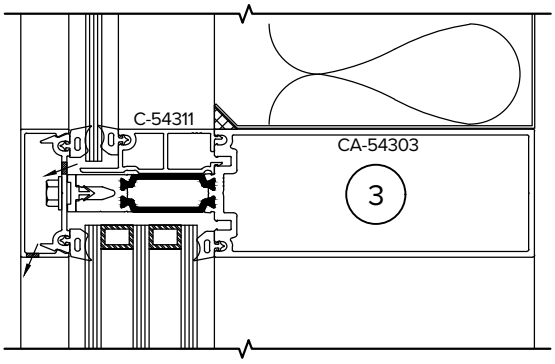

5400 HTP SERIES

TYPICAL 5400 HTP C.W. DETAILS (T.G.)

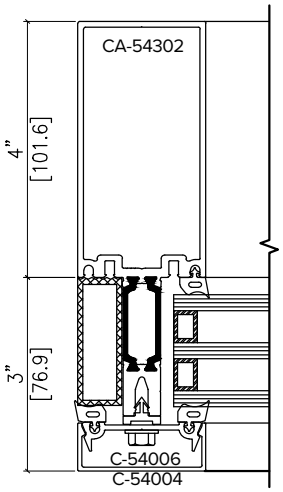

6

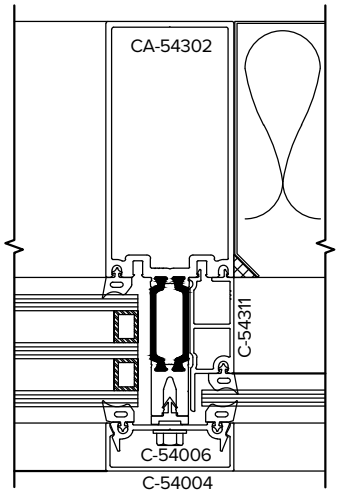

7

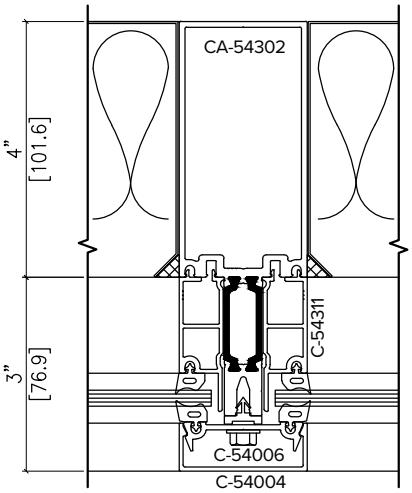

8

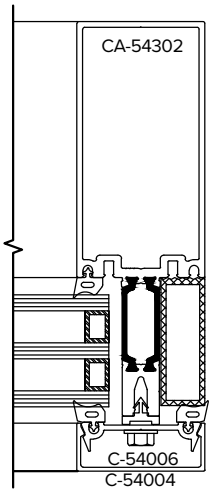

9

5400 HTP SERIES

TYPICAL 5400 HTP
C.W. DETAILS (T.G.)

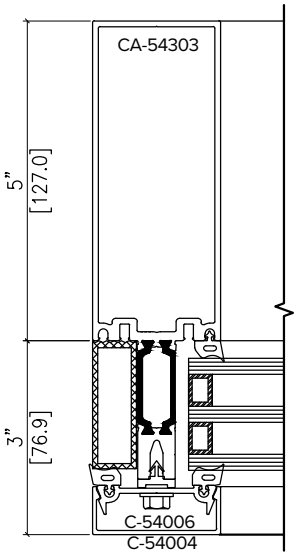

6

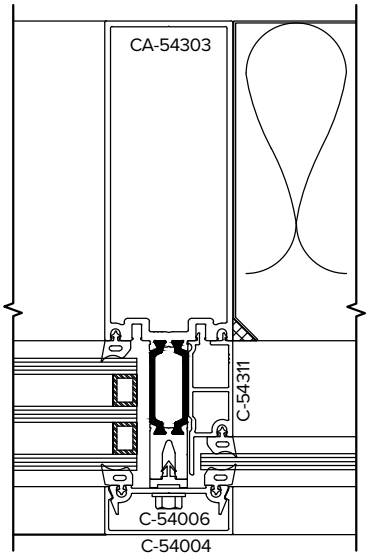

7

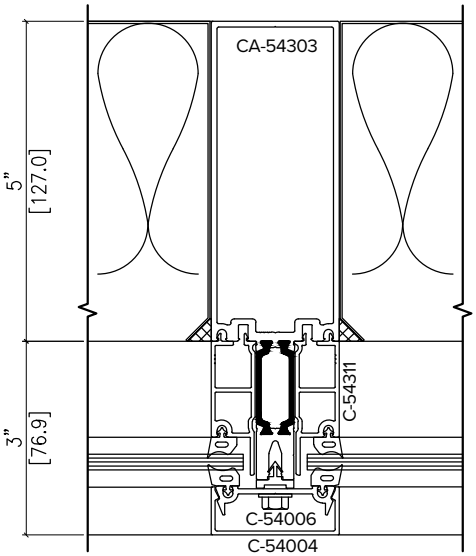

8

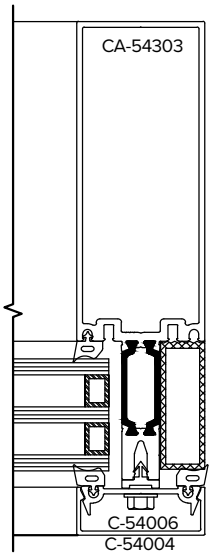

9

5400 HTP SERIES

TYPICAL 5400 HTP/SSG C.W. DETAILS (T.G.)

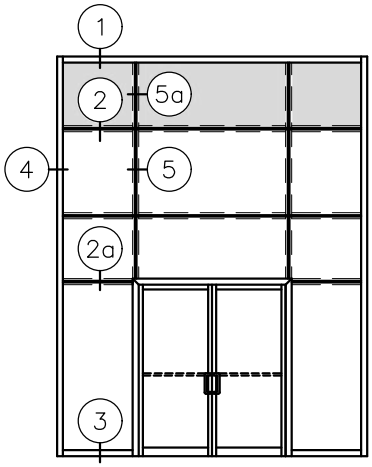

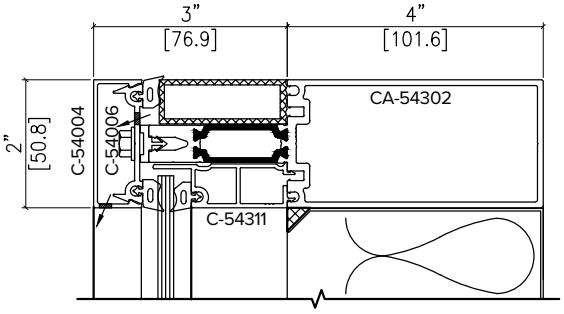

1

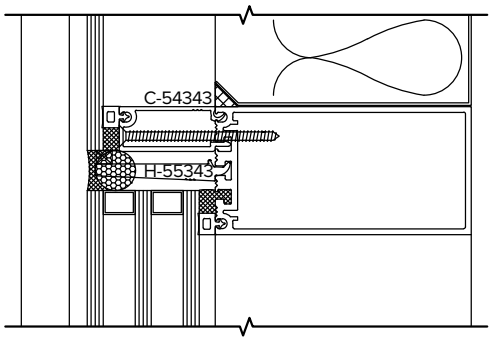

2

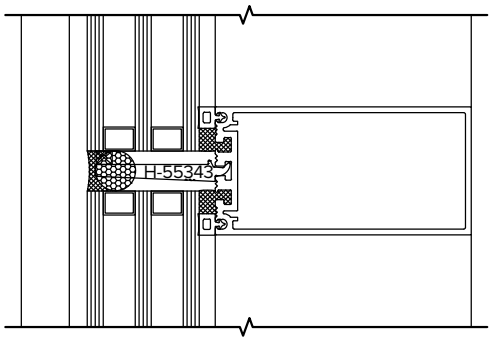

2a

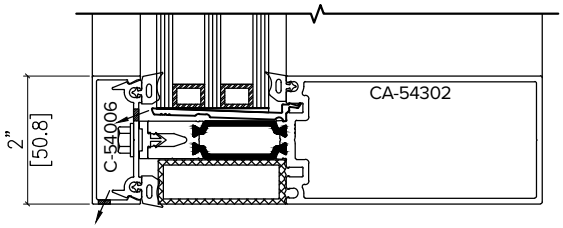

3

5400 HTP SERIES

TYPICAL 5400 HTP/SSG C.W. DETAILS (T.G.)

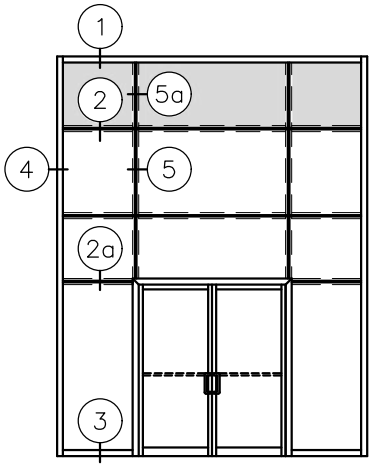

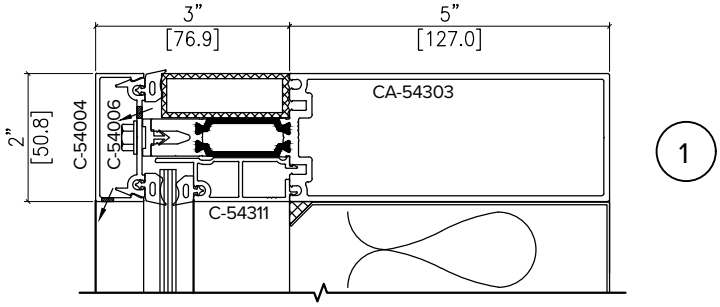

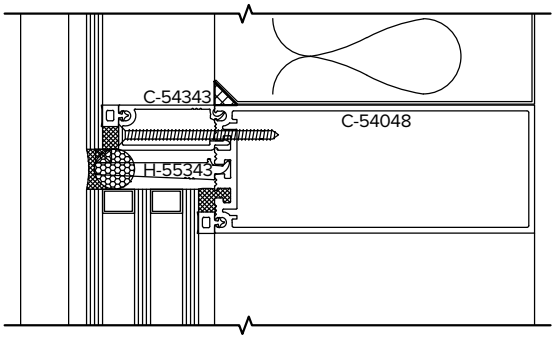

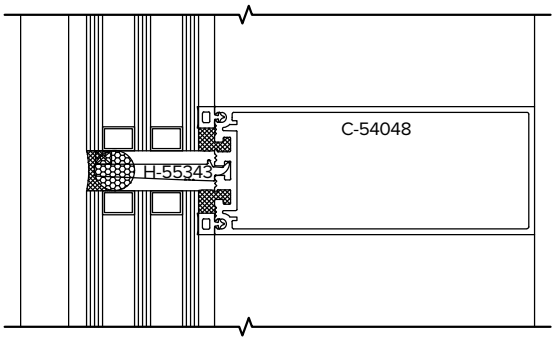

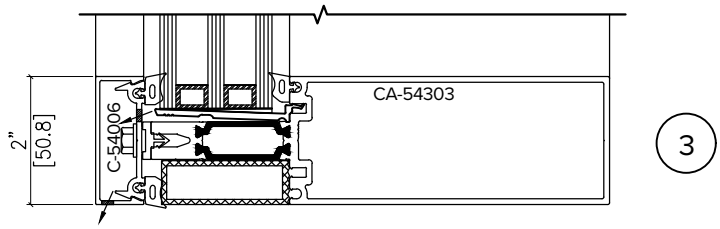

5400 HTP SERIES

TYPICAL 5400 HTP/SSG C.W. DETAILS (T.G.)

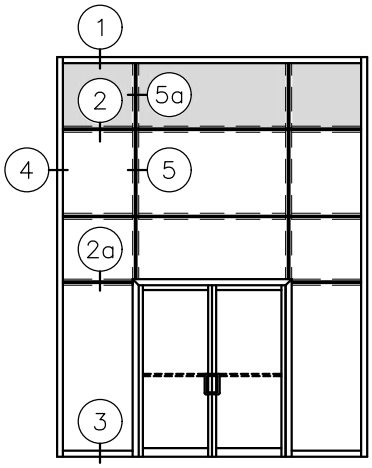

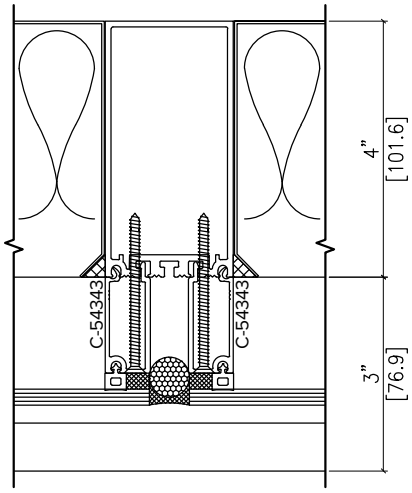

5a

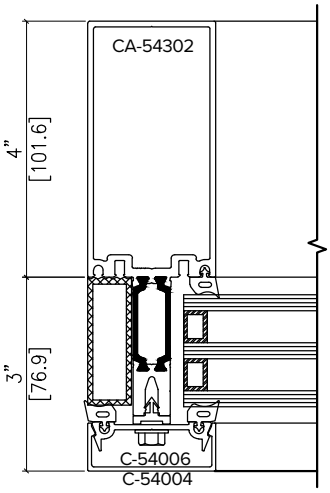

4

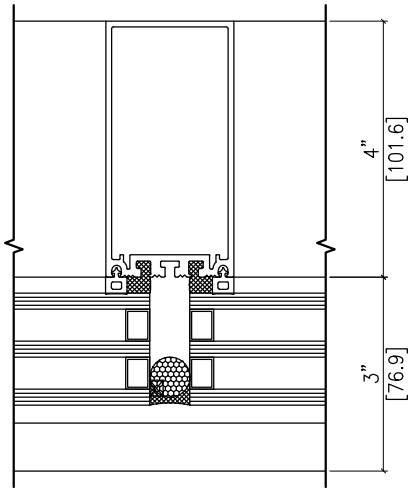

5

5400 HTP SERIES

TYPICAL 5400 HTP/SSG C.W. DETAILS (T.G.)

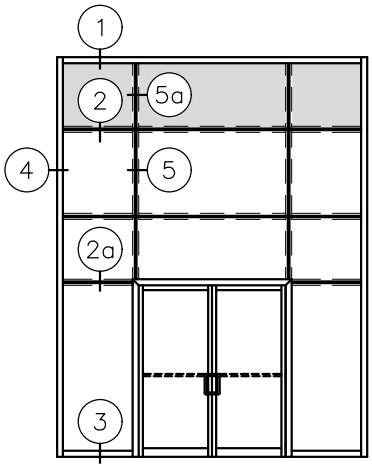

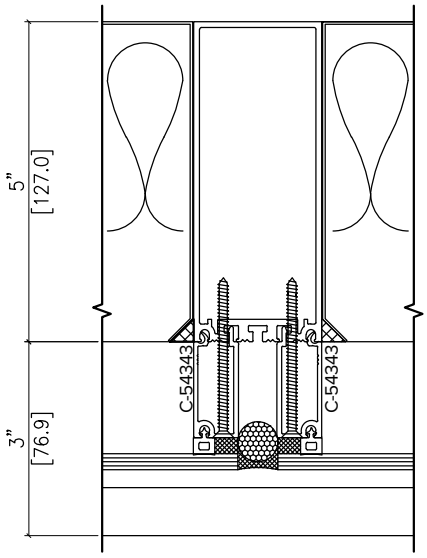

5a

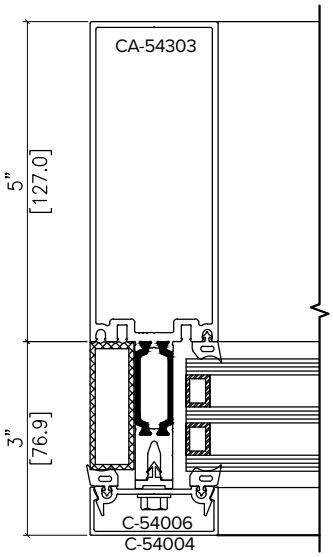

4

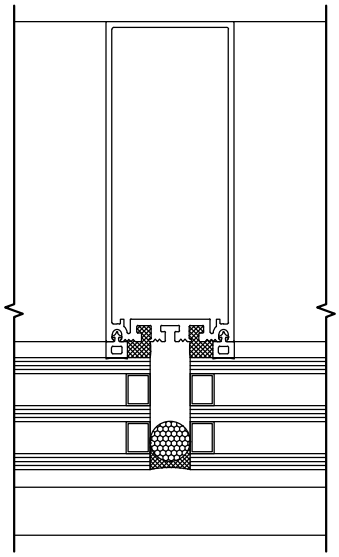

5

5400 HTP SERIES

HTP DOOR IN 5400 HTP C.W. (T.G.)

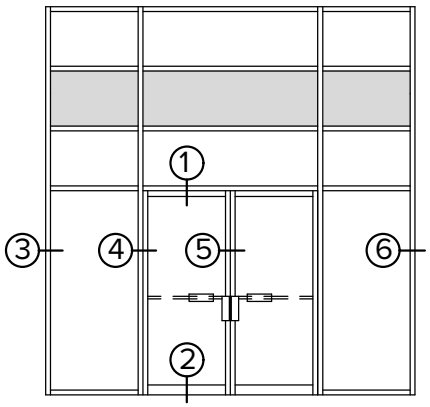

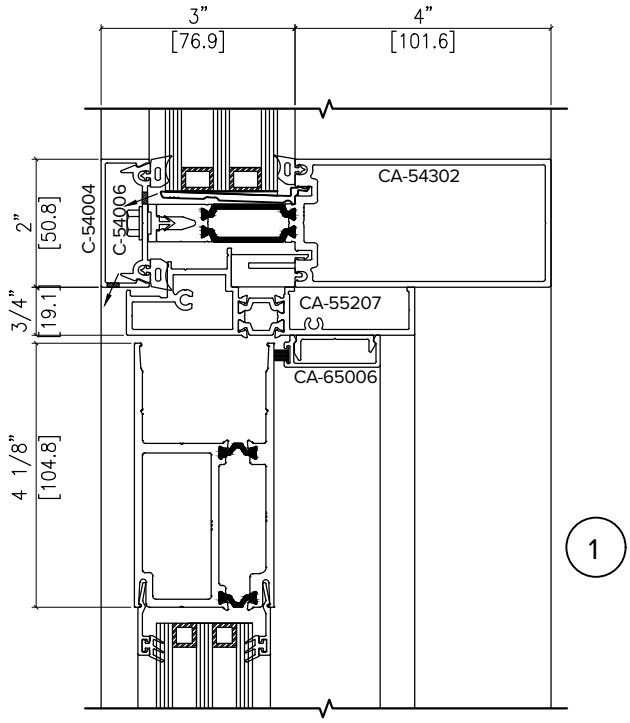

OPTION: H.T.P CURTAIN WALL FLUSH ADAPTOR

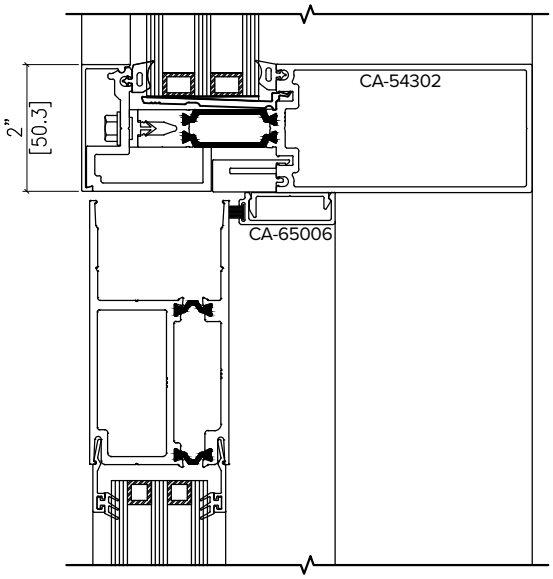

1a

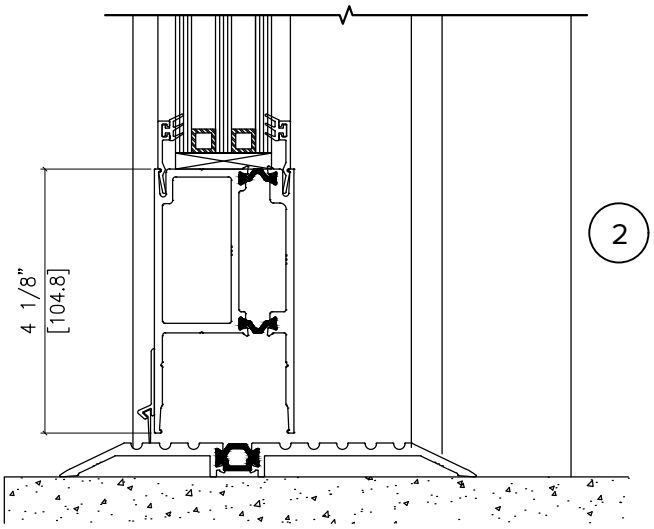

5400 HTP SERIES

HTP DOOR IN 5400 HTP C.W. (T.G.)

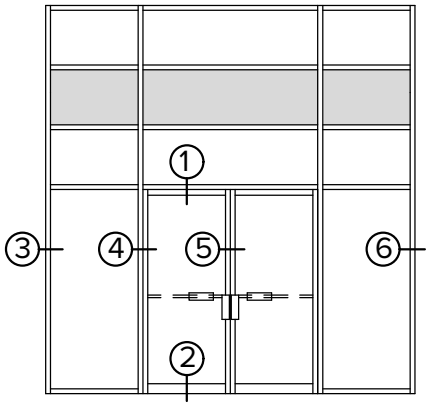

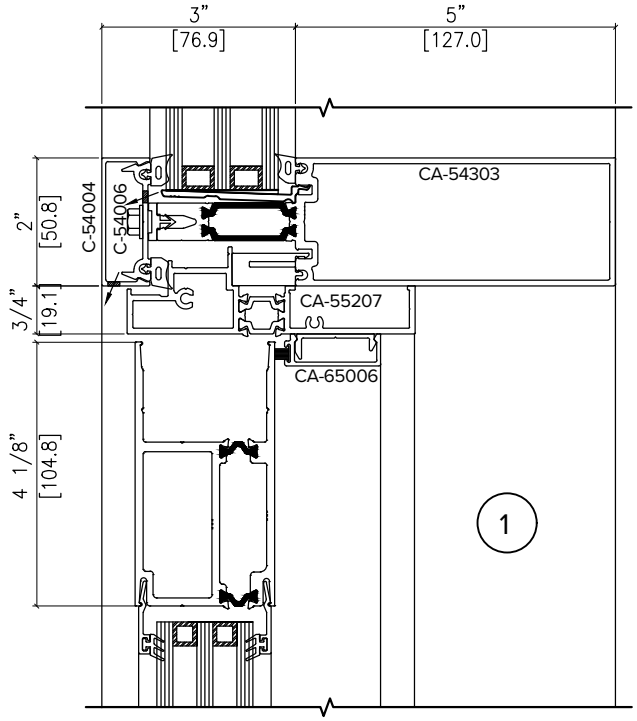

OPTION: H.T.P CURTAIN WALL FLUSH ADAPTOR

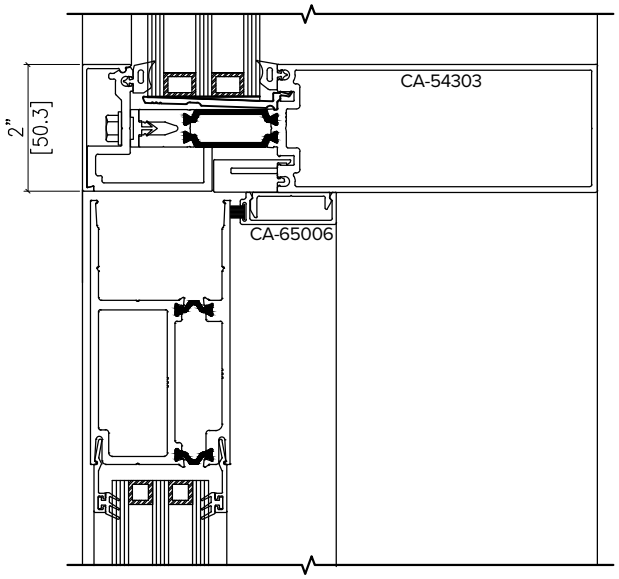

1a

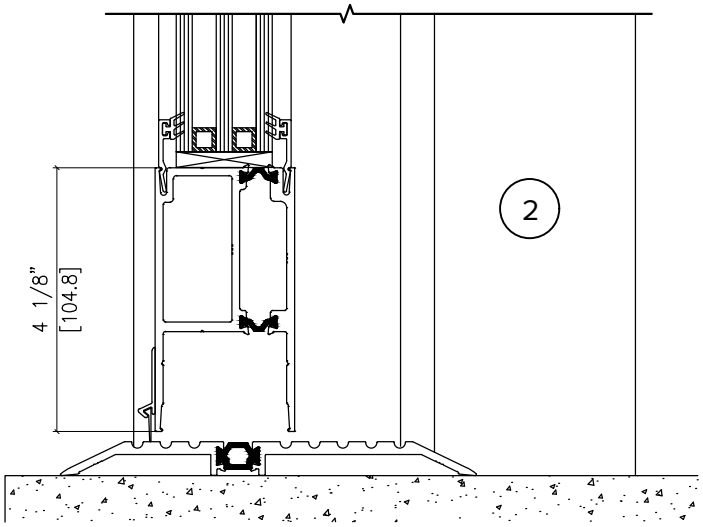

5400 HTP SERIES

HTP DOOR IN 5400 HTP
C.W. (T.G.)

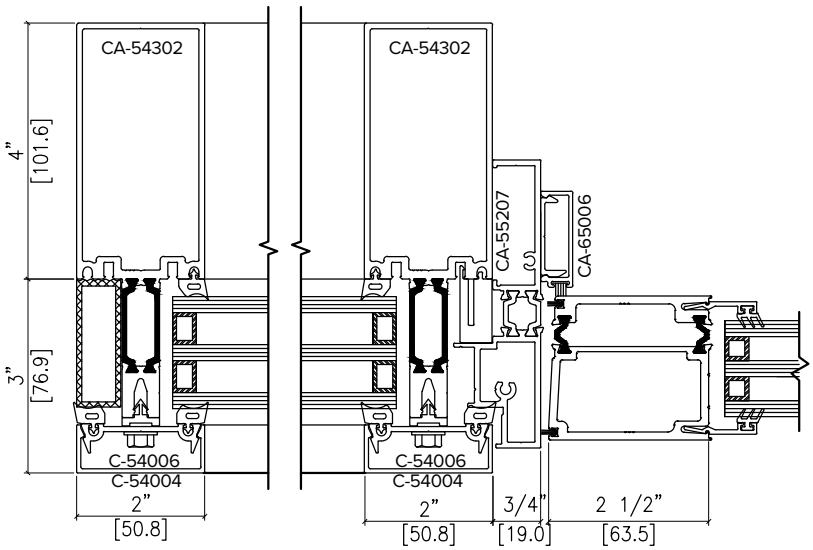

3

4

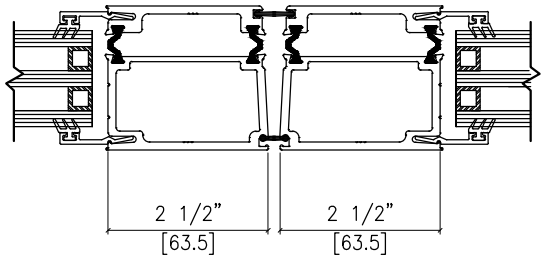

5

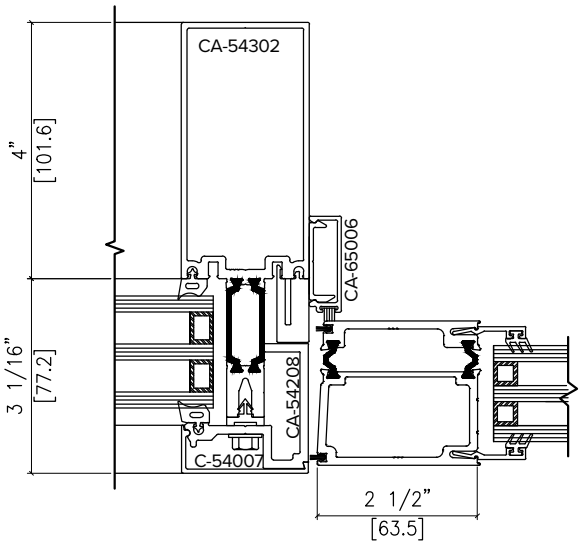

4a

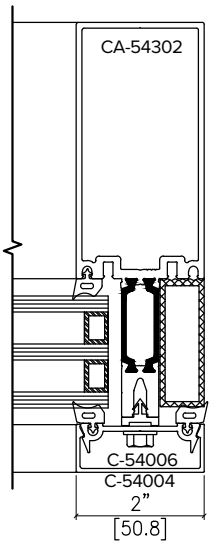

6

OPTION: H.T.P CURTAIN WALL FLUSH ADAPTOR

5400 HTP SERIES

HTP DOOR IN 5400 HTP
C.W. (T.G.)

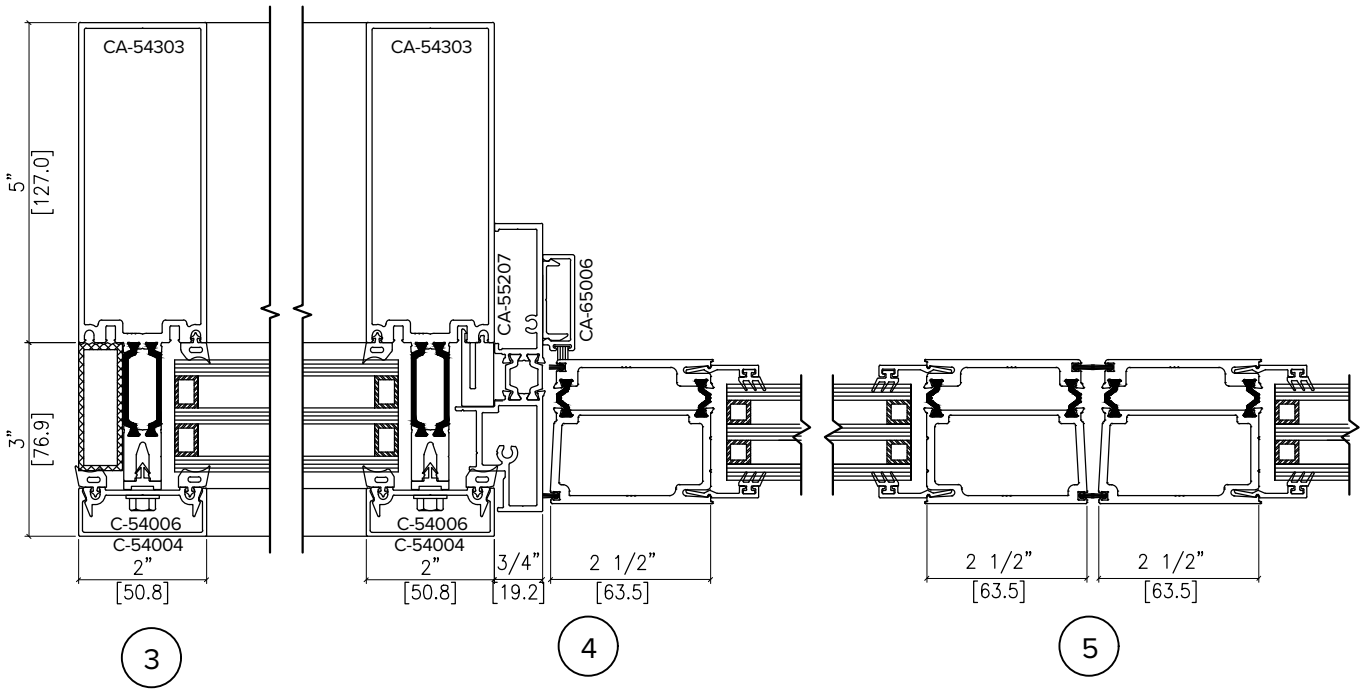

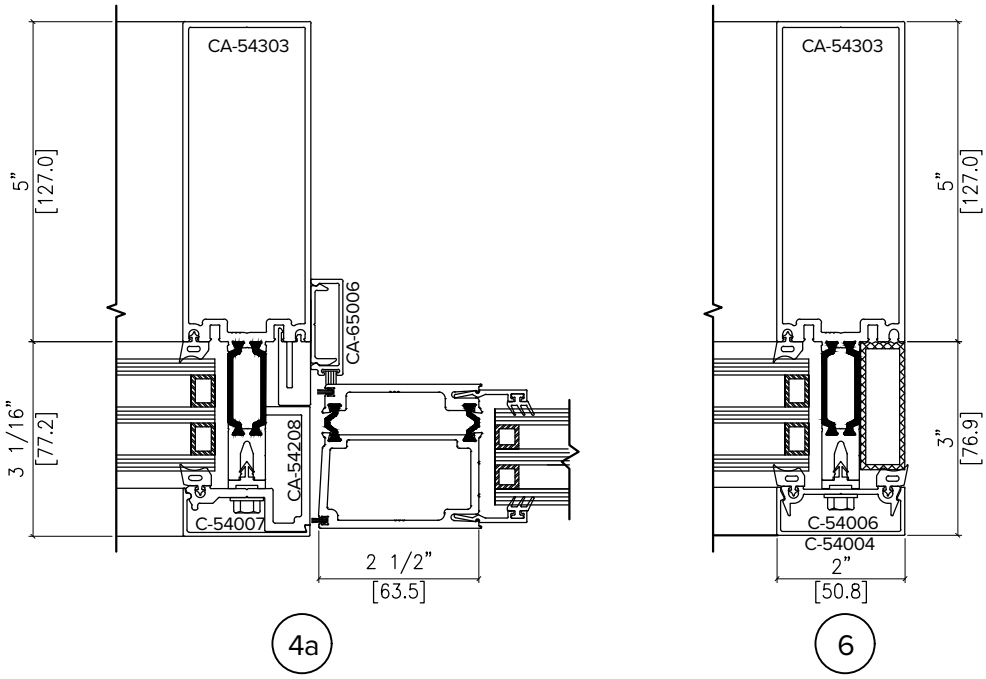

OPTION: H.T.P CURTAIN WALL FLUSH ADAPTOR

5400 HTP SERIES

535 PROJECT-OUT VENT IN 5400 HTP C.W. (T.G.)

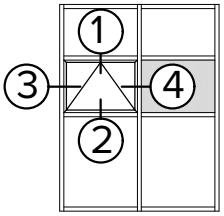

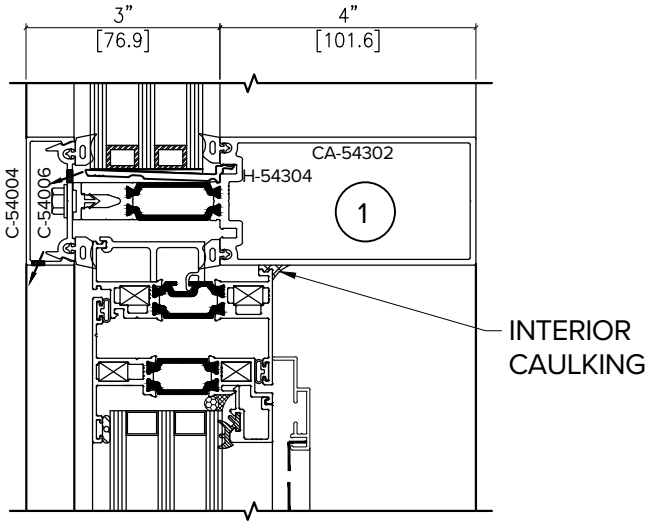

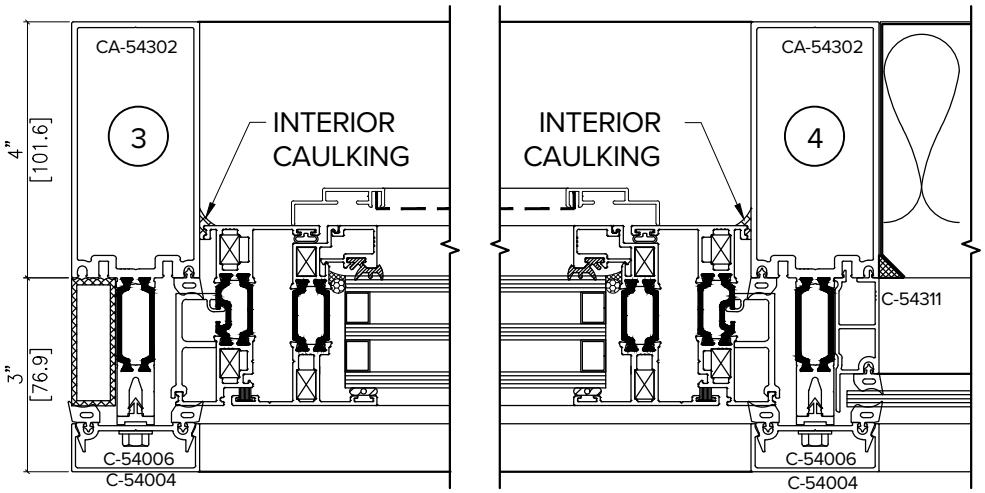

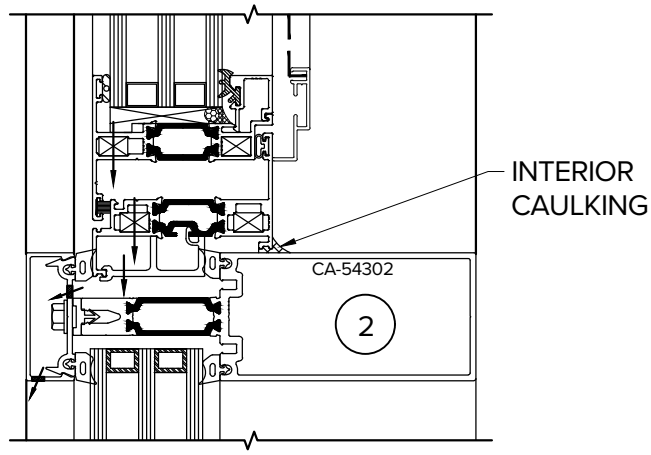

5400 HTP SERIES

535 PROJECT-OUT VENT IN 5400 HTP C.W. (T.G.)

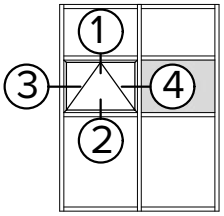

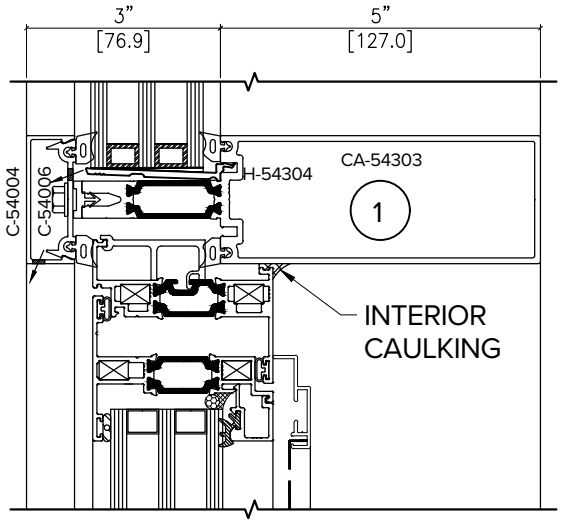

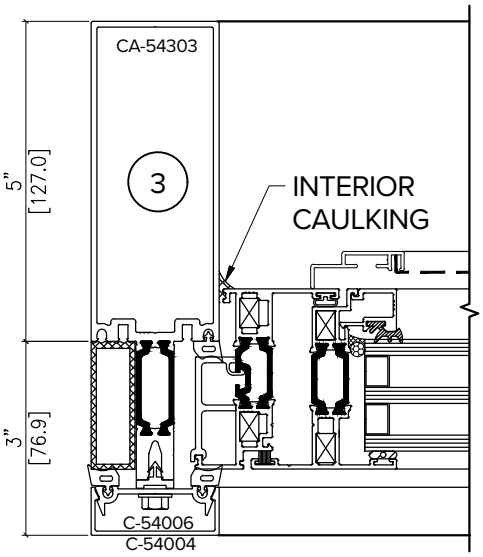

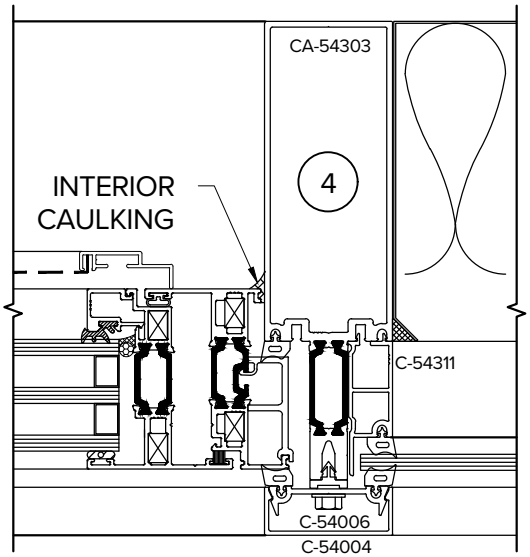

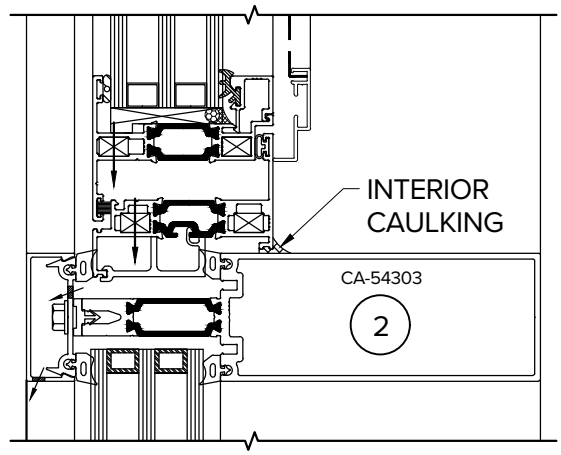

5400 HTP SERIES

535 PROJECT-IN VENT IN 5400 HTP C.W. (T.G.)

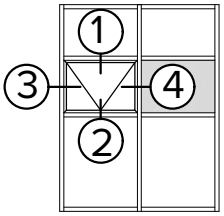

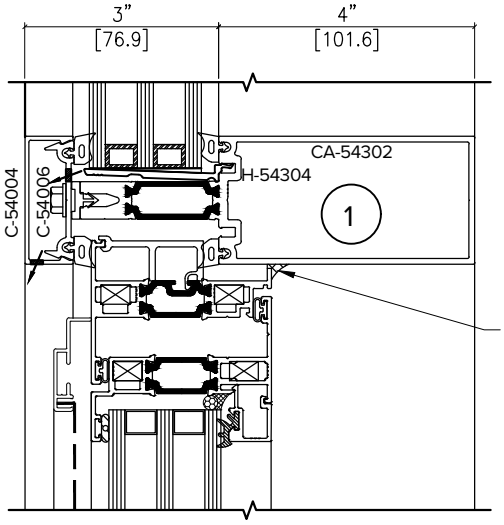

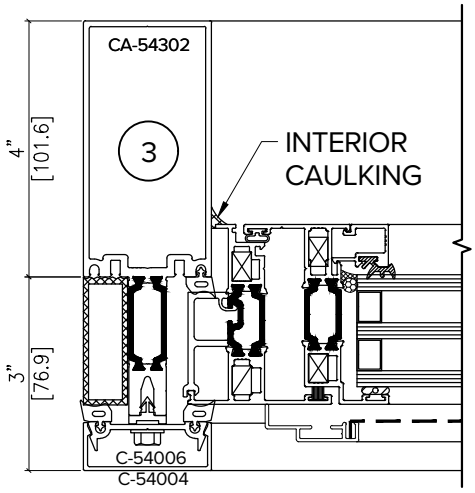

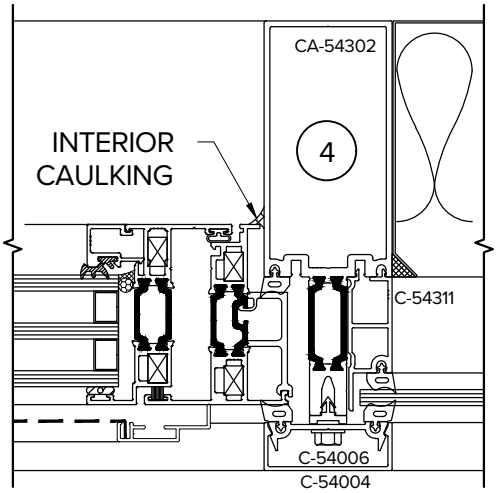

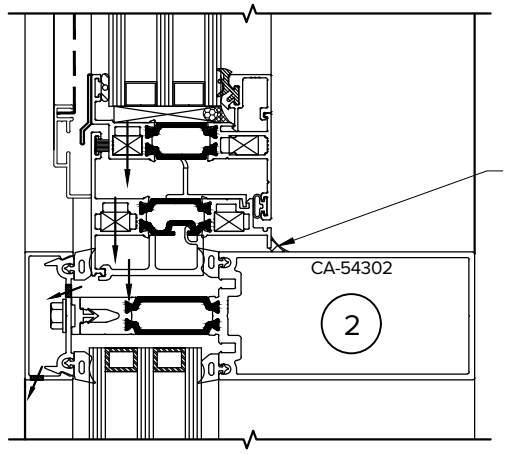

5400 HTP SERIES

535 PROJECT-IN VENT IN 5400 HTP C.W. (T.G.)

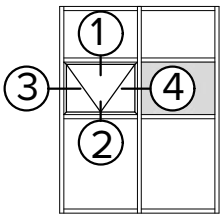

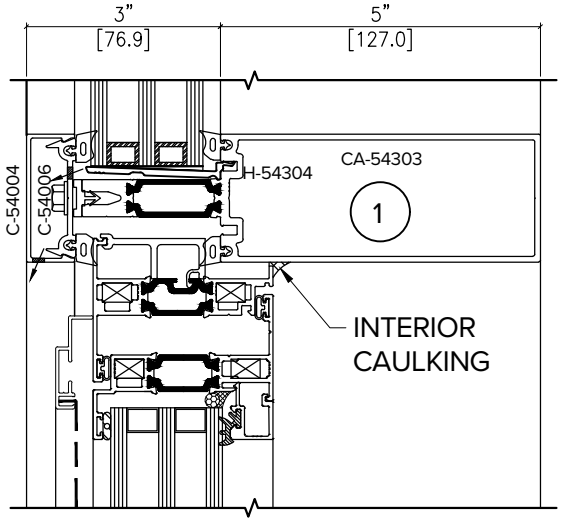

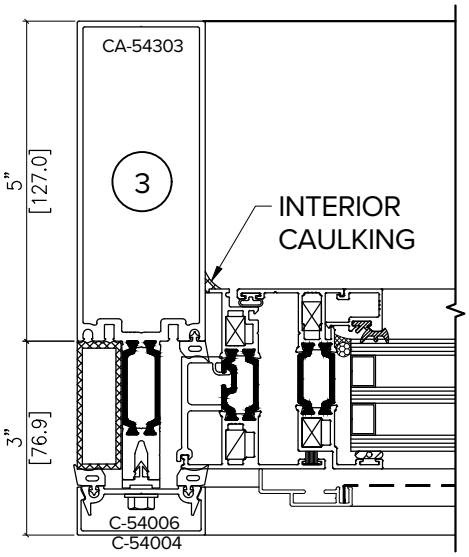

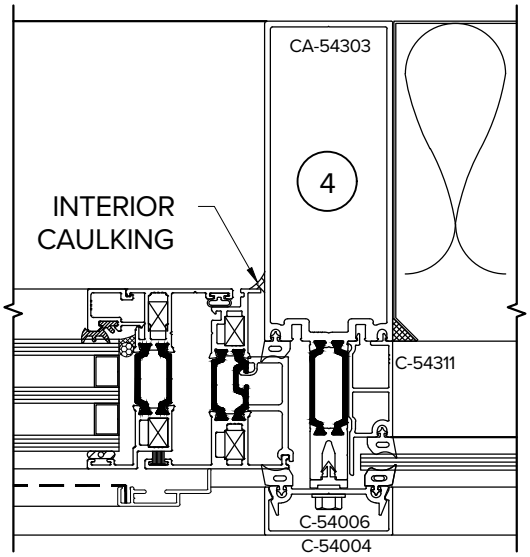

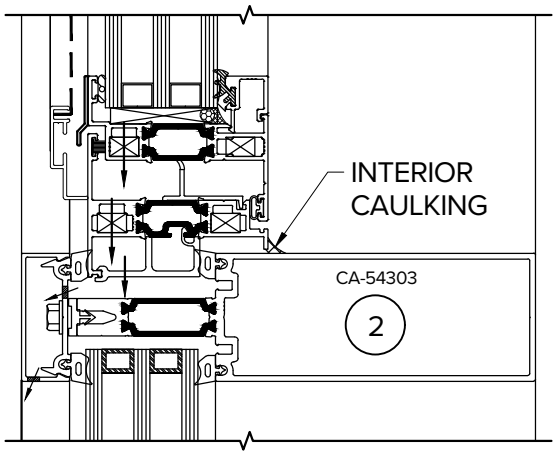

5400 HTP SERIES

575 PROJECT-OUT VENT IN 5400 HTP C.W. (T.G.)

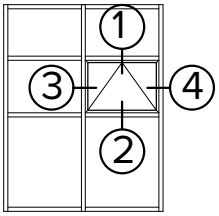

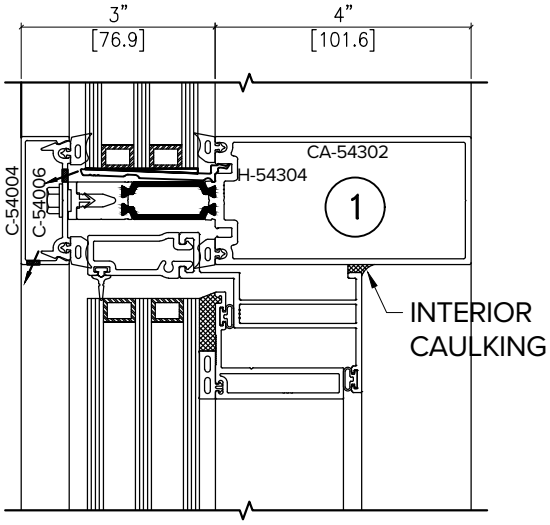

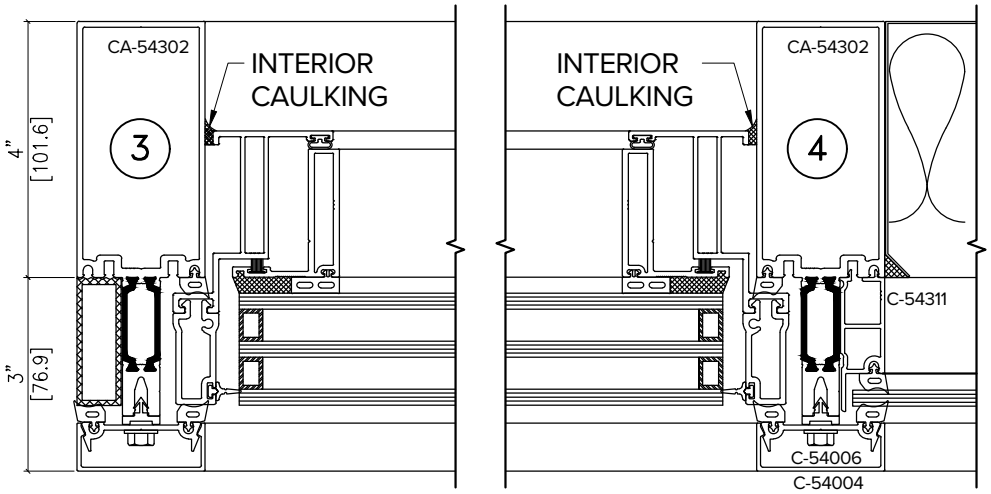

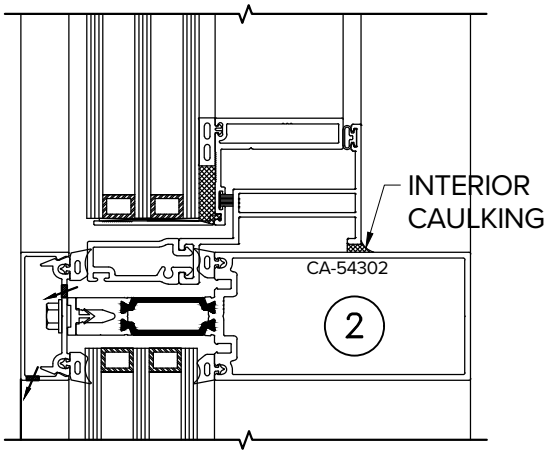

5400 HTP SERIES

575 PROJECT-OUT VENT IN 5400 HTP C.W. (T.G.)

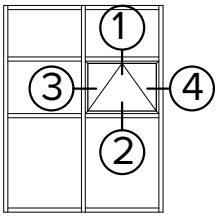

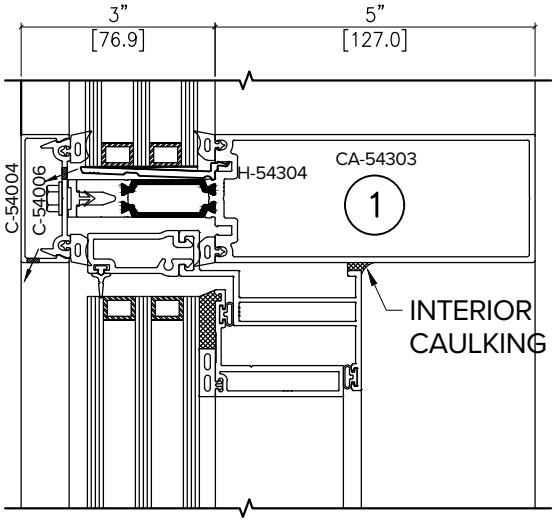

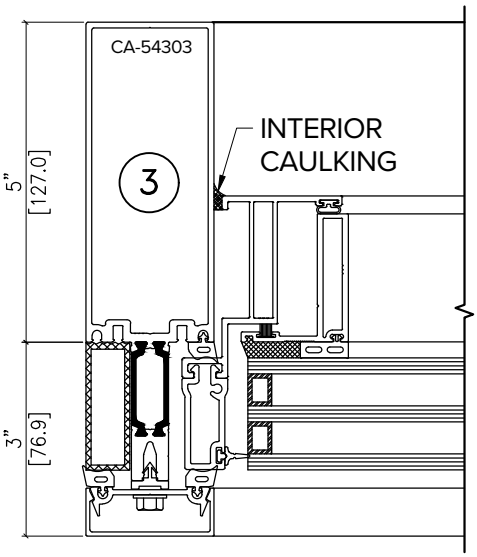

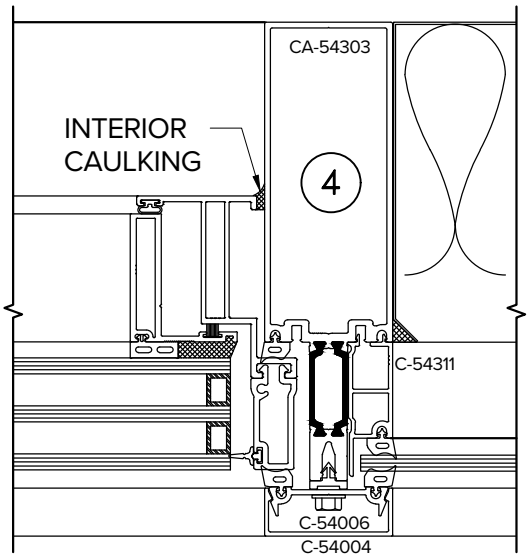

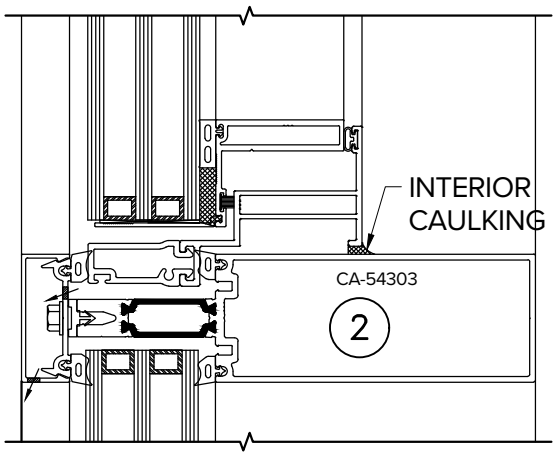

5400 HTP SERIES

575 PROJECT-OUT VENT IN 5400 HTP / SSG C.W. (T.G.)

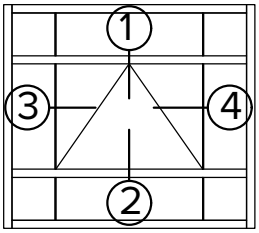

SSG VERTICAL ONLY

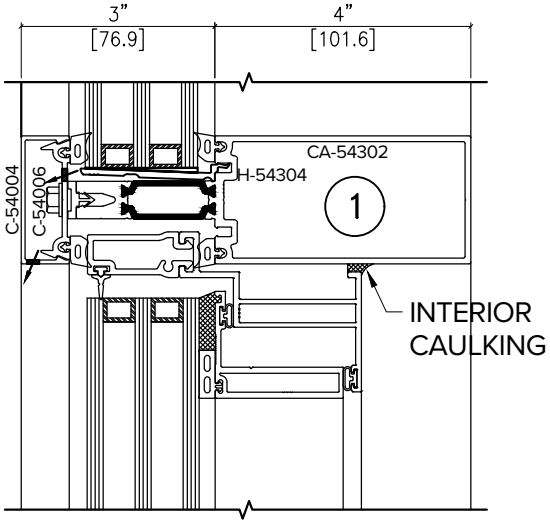

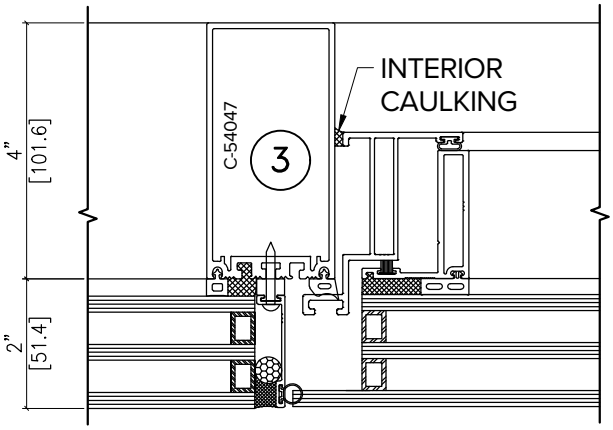

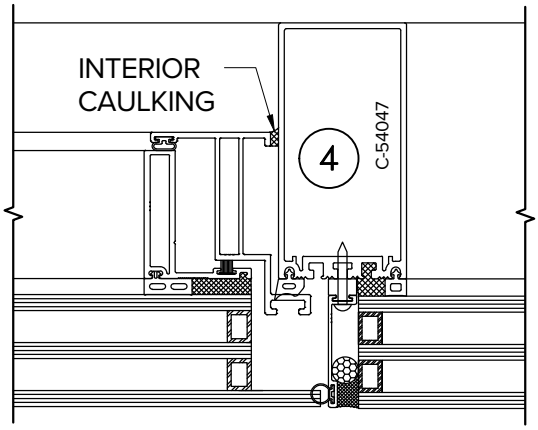

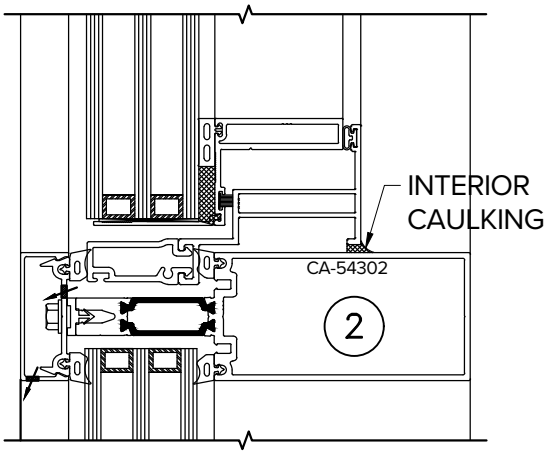

5400 HTP SERIES

575 PROJECT-OUT VENT IN 5400 HTP / SSG C.W. (T.G.)

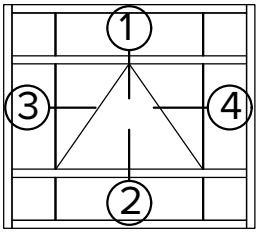

SSG VERTICAL ONLY

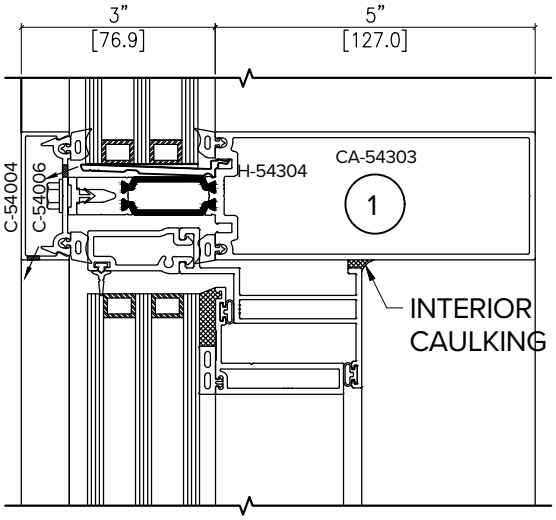

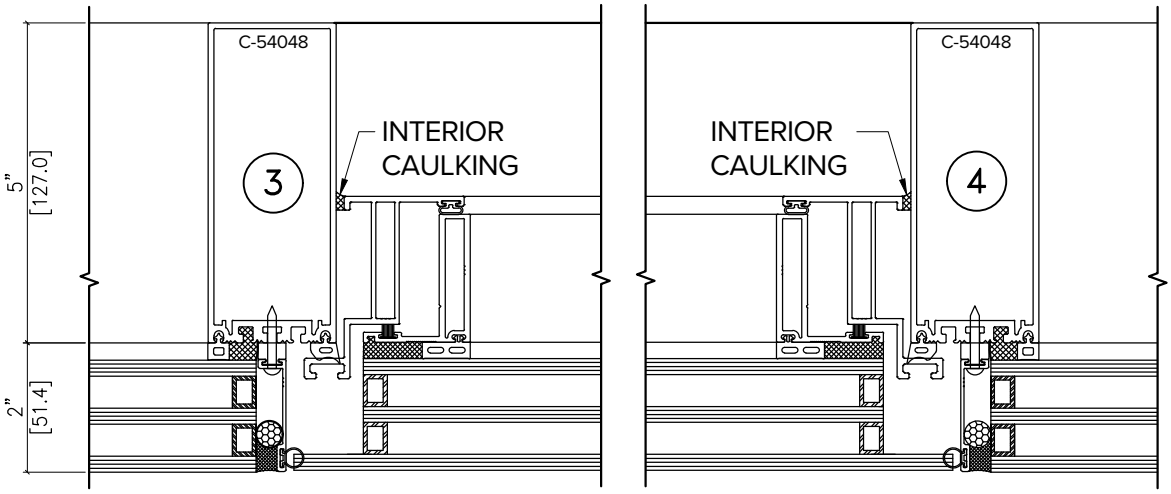

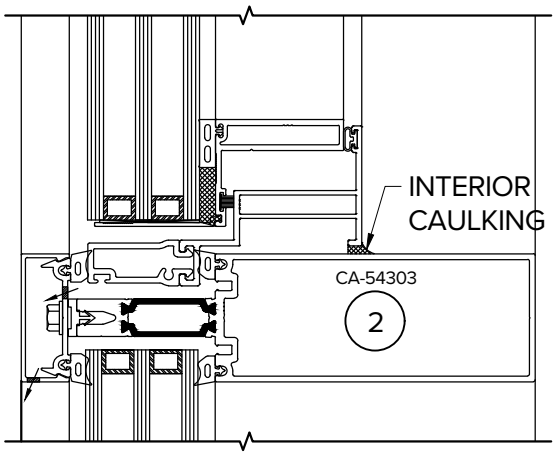

5400 HTP SERIES

575 PROJECT-OUT VENT IN 5400 HTP / SSG C.W. (T.G.)

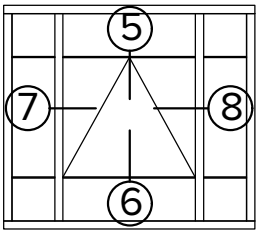

SSG HORIZONTAL ONLY

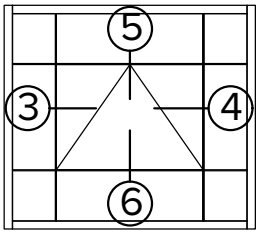

4 SIDED SSG

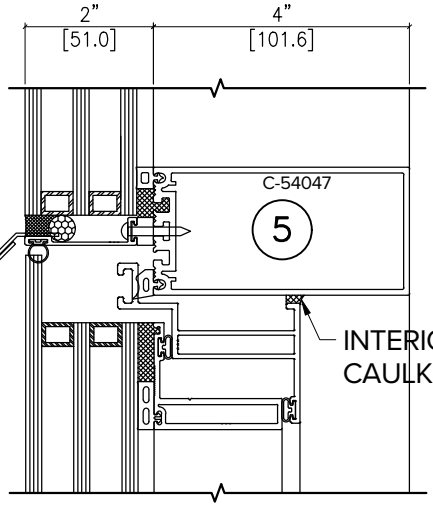

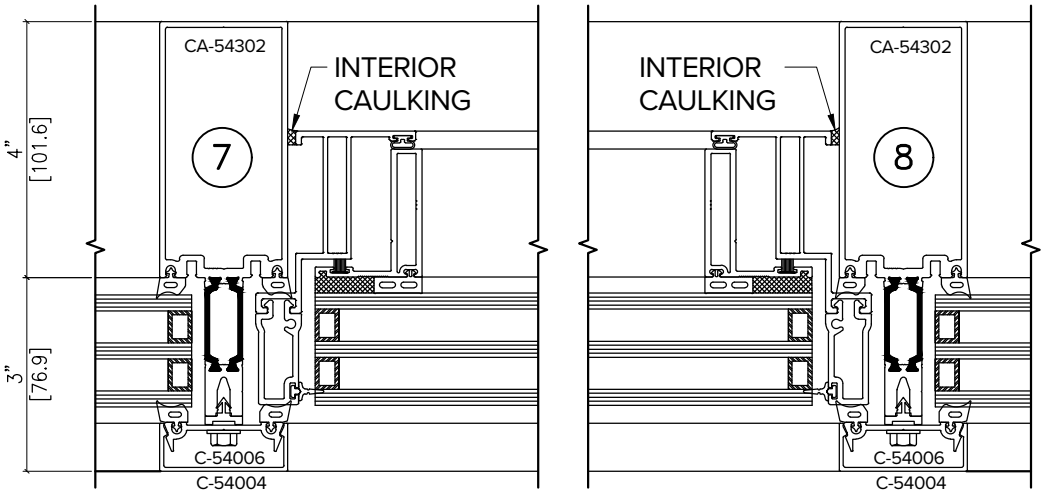

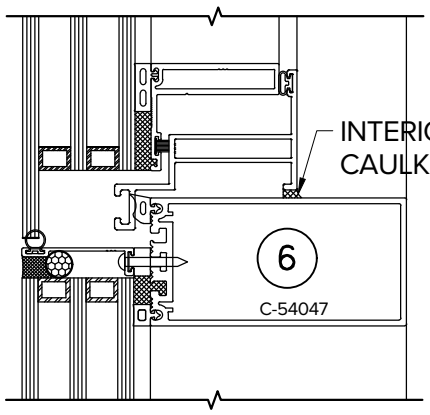

5400 HTP SERIES

575 PROJECT-OUT VENT IN 5400 HTP / SSG C.W. (T.G.)

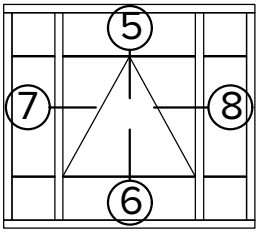

SSG HORIZONTAL ONLY

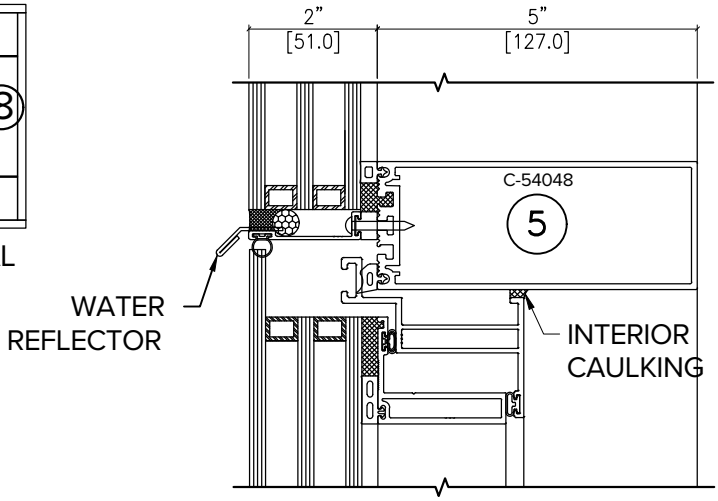

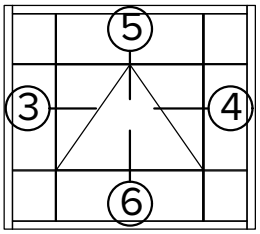

4 SIDED SSG

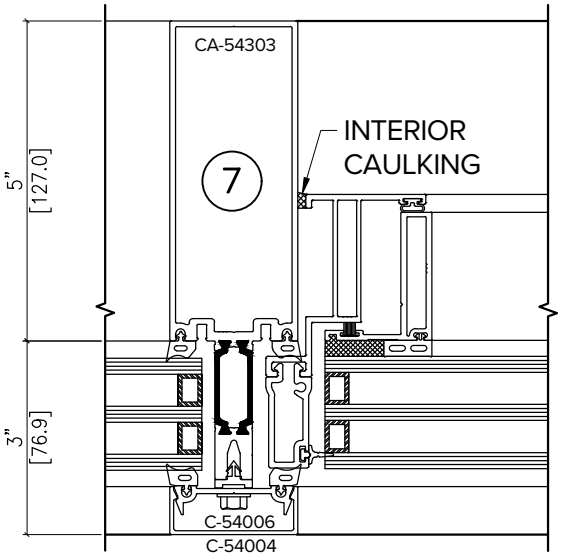

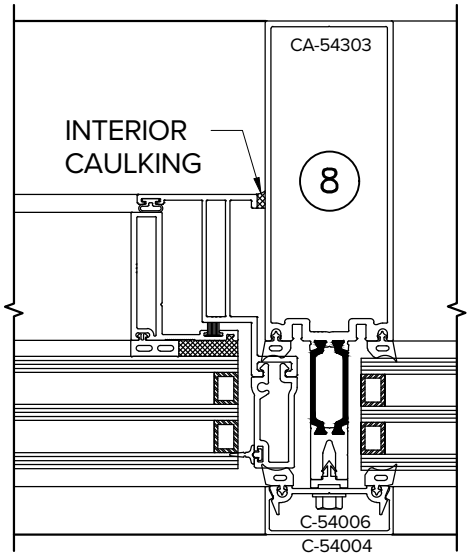

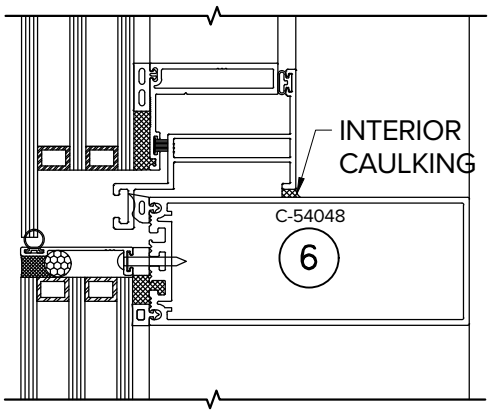

5400 HTP SERIES

TYPICAL CORNER DETAILS (T.G.)

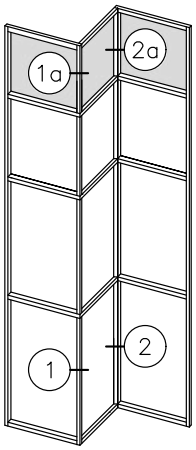

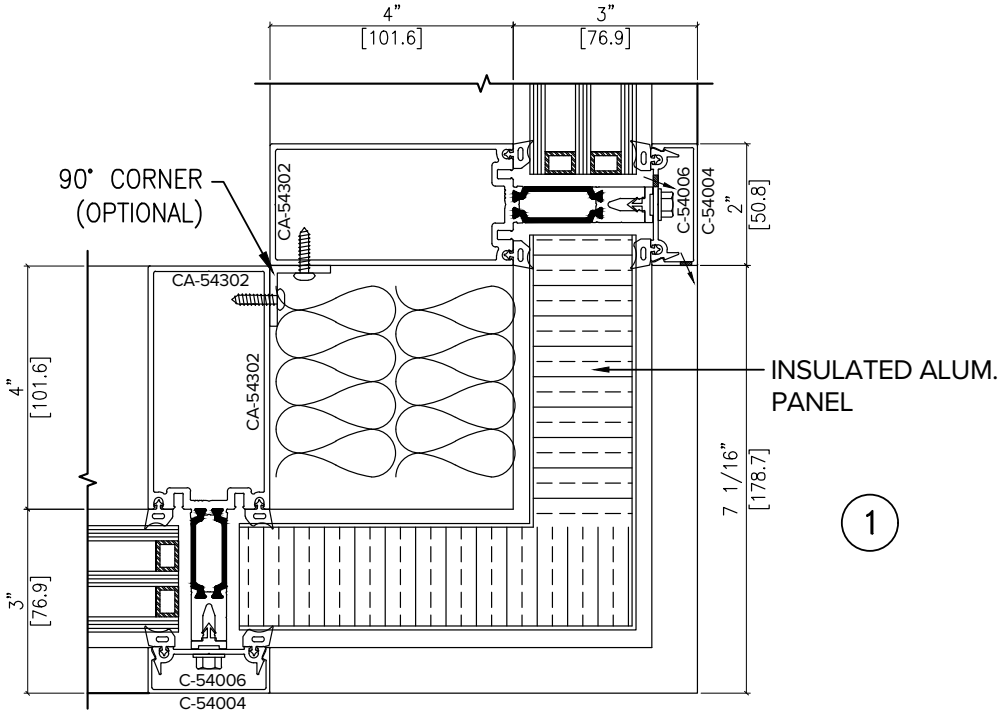

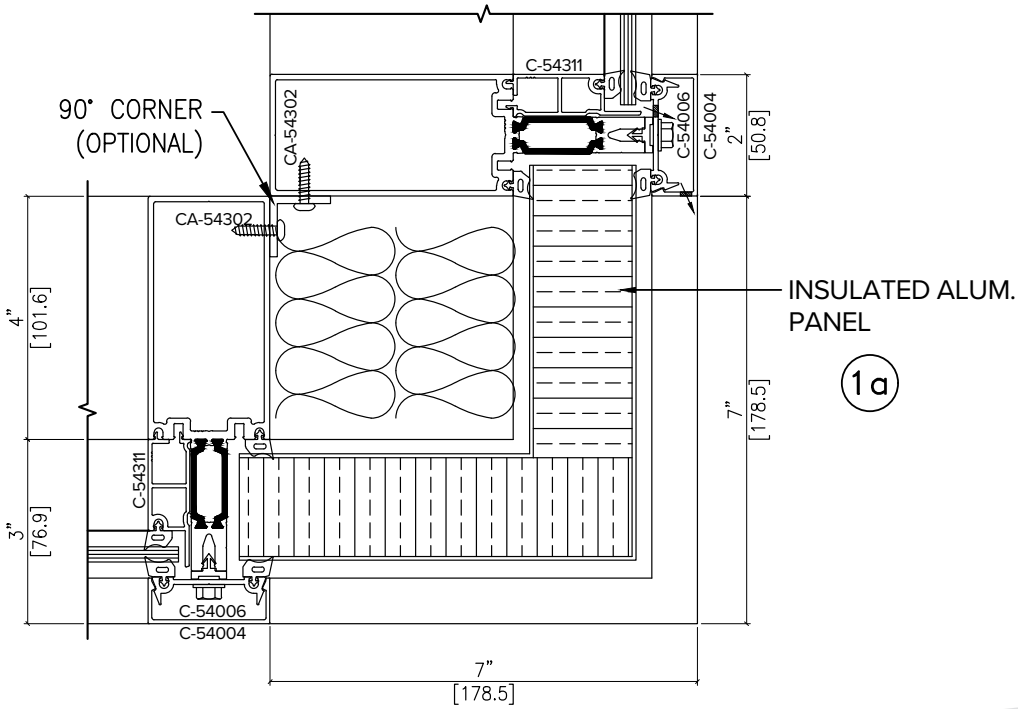

5400 HTP SERIES

TYPICAL CORNER DETAILS (T.G.)

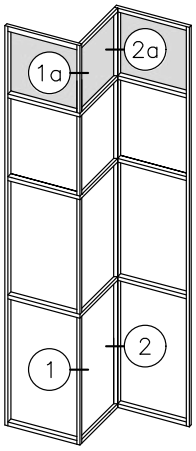

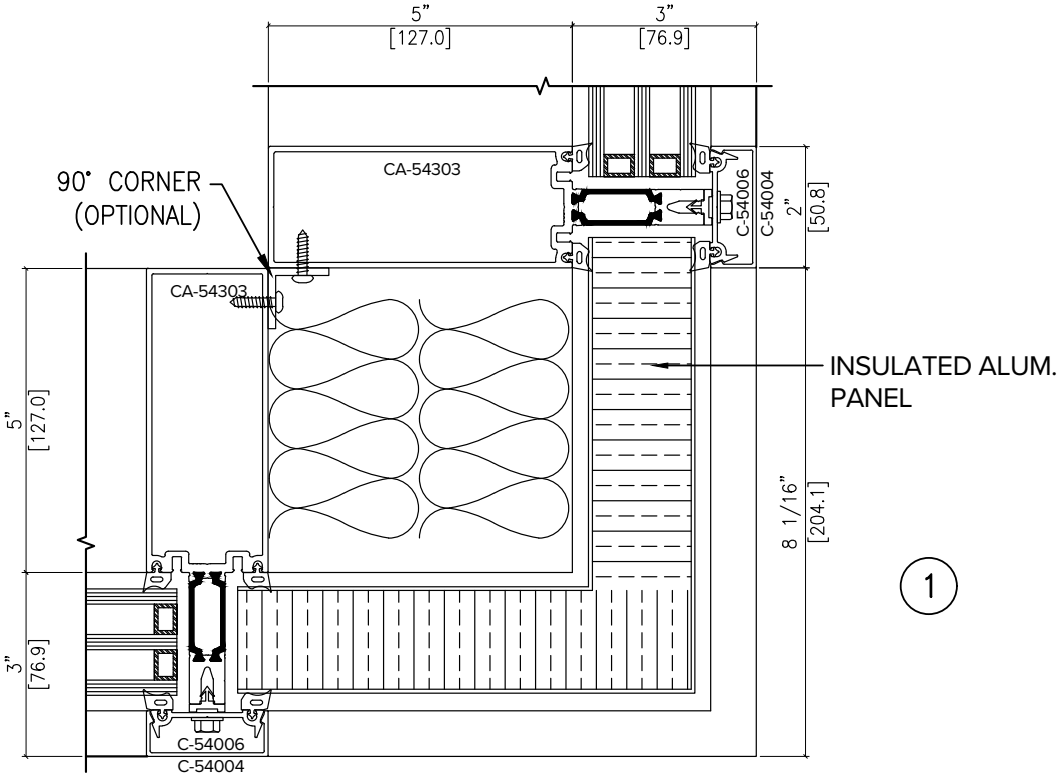

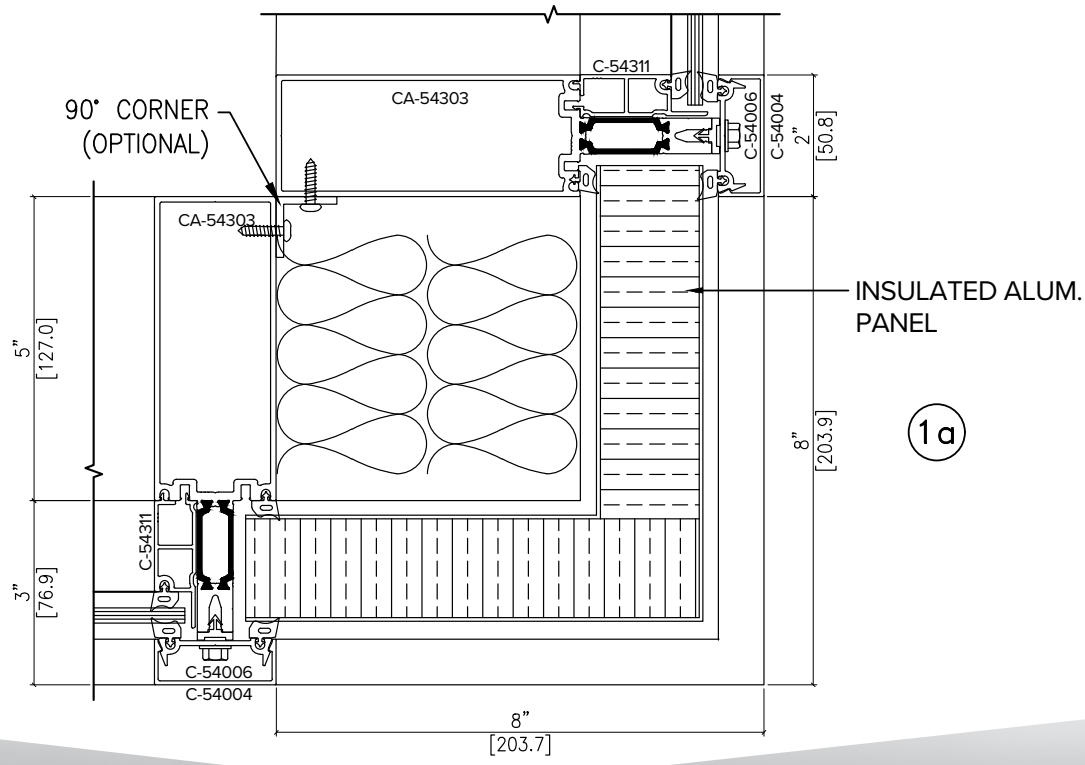

5400 HTP SERIES

TYPICAL CORNER DETAILS (T.G.)

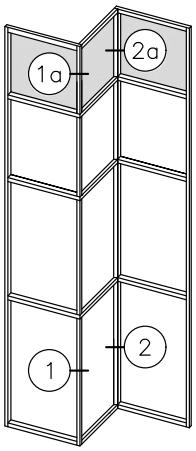

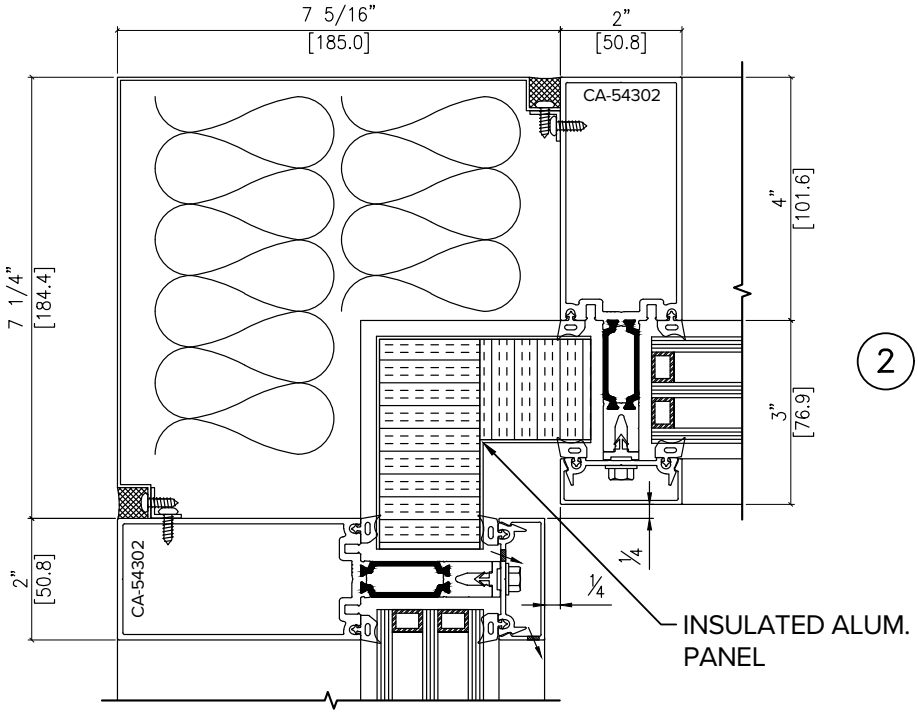

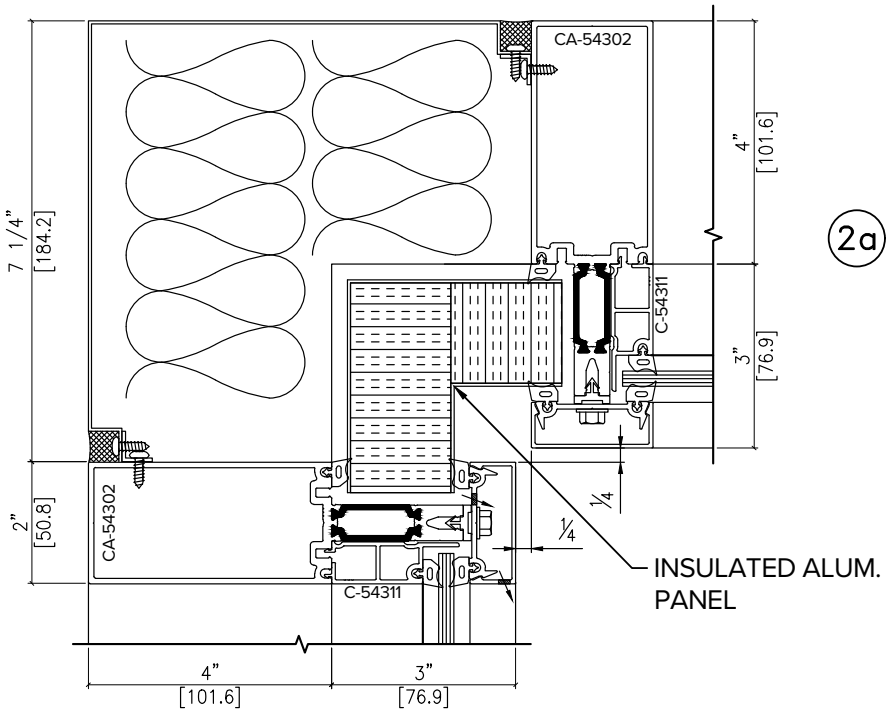

5400 HTP SERIES

TYPICAL CORNER DETAILS (T.G.)

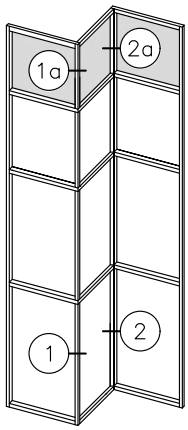

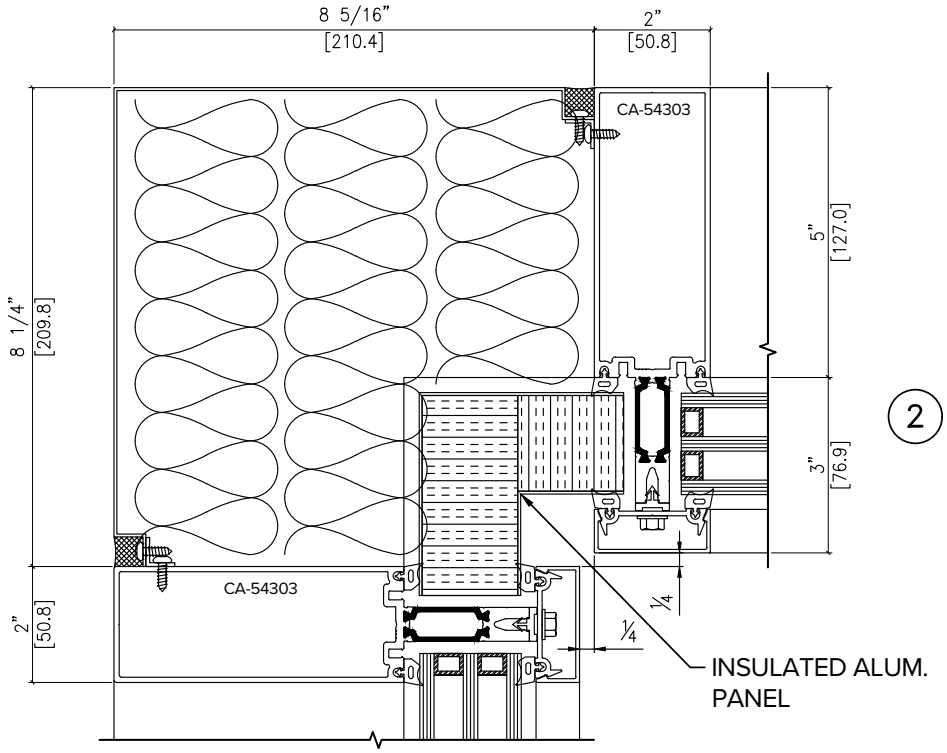

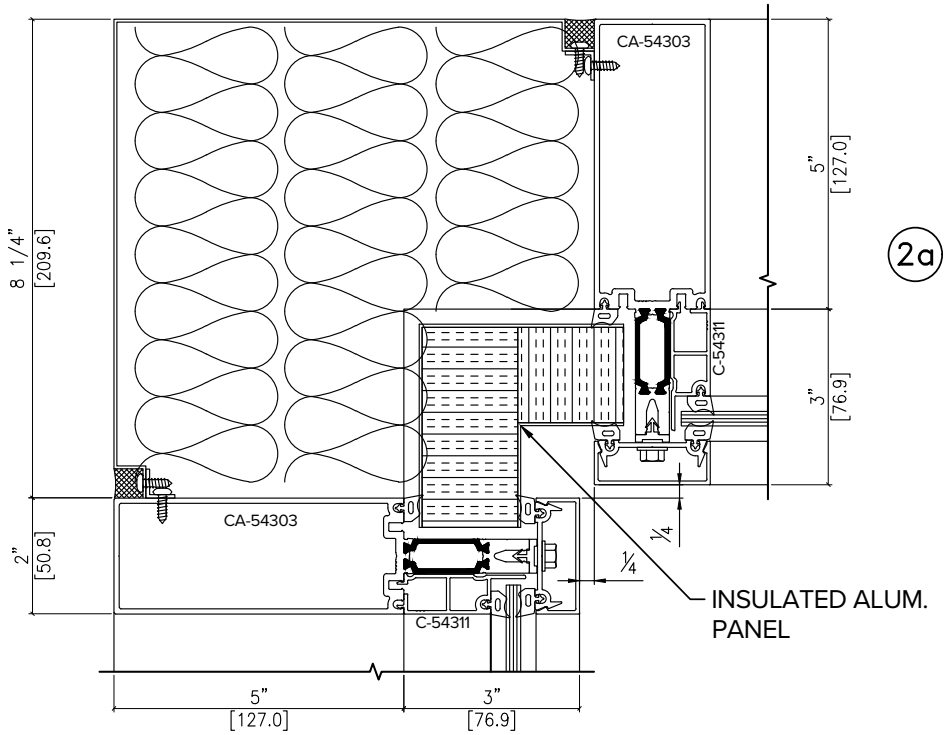

5400 HTP SERIES

FOOT ANCHOR OPTIONS

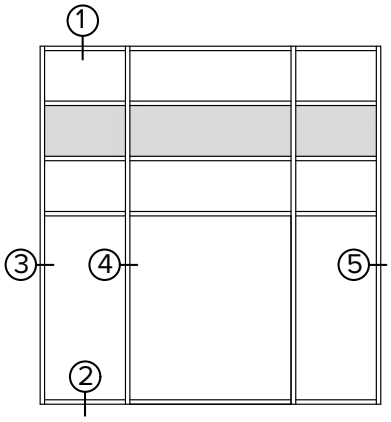

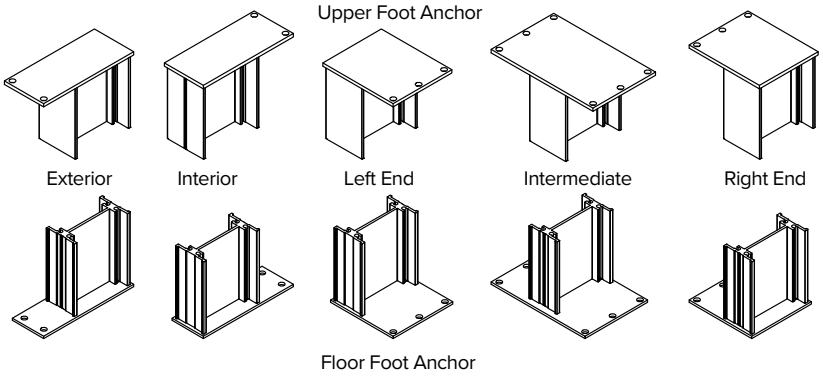

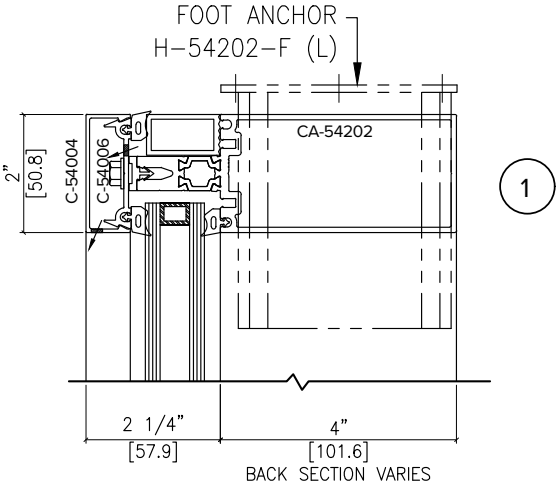

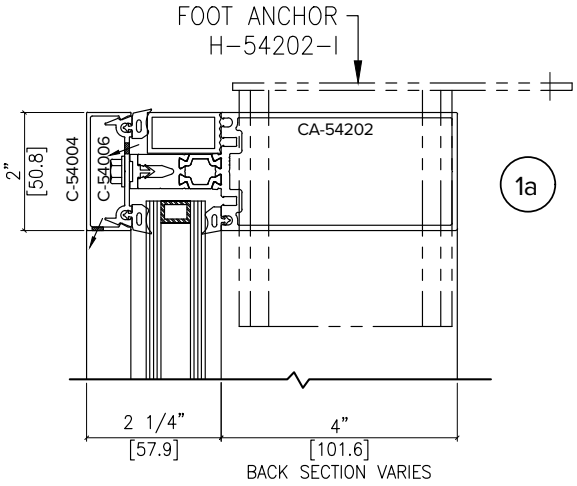

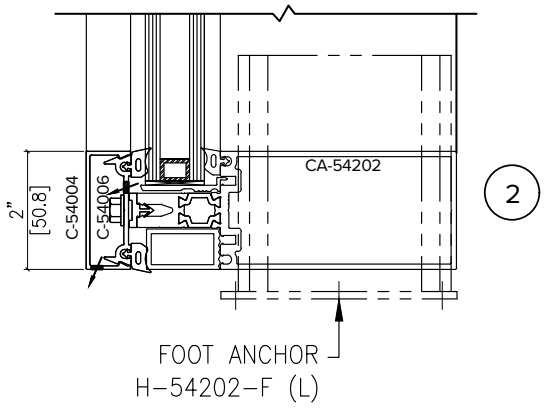

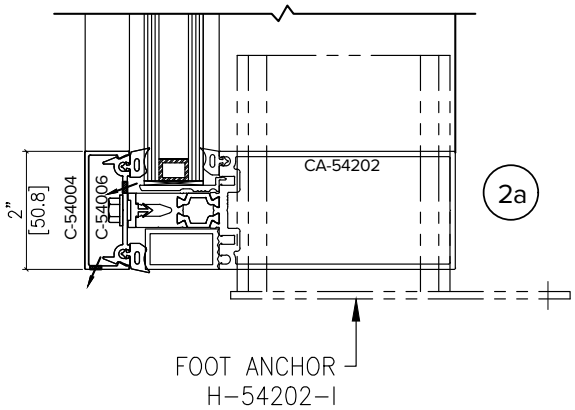

5400 HTP SERIES

FOOT ANCHOR OPTIONS

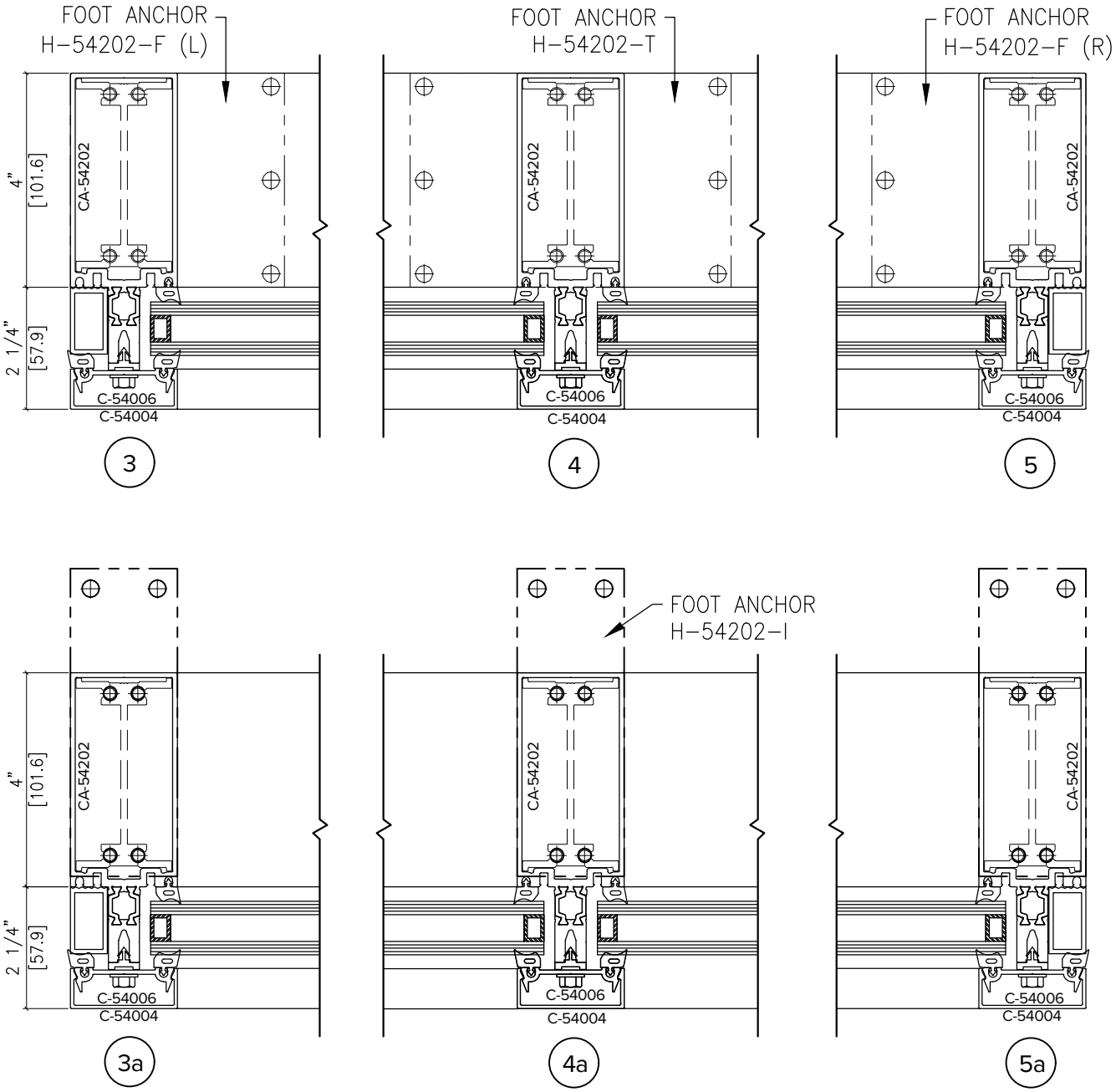

General Notes:

-
- Deflection requirements comply with S157–05/S157.1.05 and AAMA TIR–A11–2015. Deflection Limit – L/175 (Note: to convert to L/240 + ¼" deflection limit when H > 135 ft., multiply mullion spacing by k = 0.73 + 3.65/H, where H – mullion height in ft.)
- Mullion freely supported at ends.
- All reinforcing shown in these charts considered that it is mechanically fastened to the aluminum extrusion. Fastening requirements to be reviewed and approved by Engineer.
- Span chart is for estimation only. Do not utilize for detailed design. Chart is based on deflection analysis only.

5400 HTP SERIES

WINDLOAD CHARTS

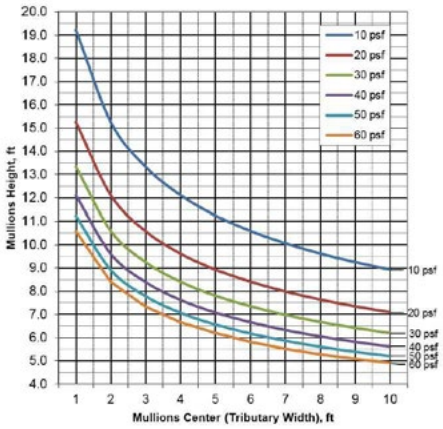

2" x $2\frac{3}{4}$"
(50.8mm x 69.8mm)
Double Glazed

Ixx = 2.307 in^4
Sxx = 1.074 in^3

CA-54201

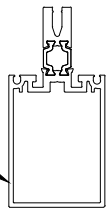

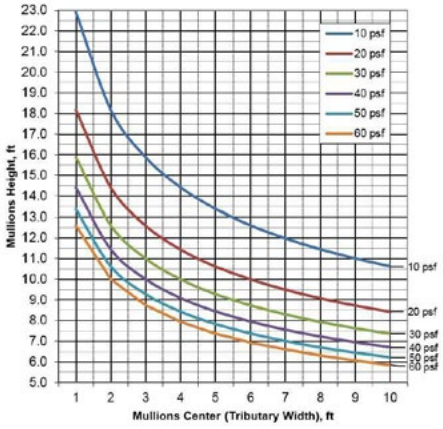

2" x $2\frac{3}{4}$"
(50.8mm x 69.8mm)
Double Glazed
with HSS $2x1\frac{1}{2}x\frac{1}{8}$"

Ixx = 3.902 in^4
Sxx = 1.582 in^3

HSS $2x1\frac{1}{2}x\frac{1}{8}$"
CA-54201

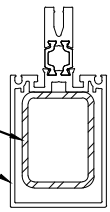

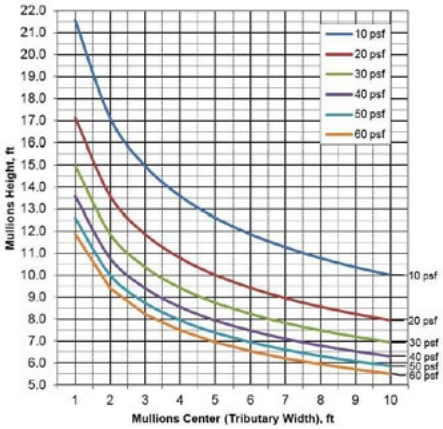

2" x $2\frac{3}{4}$"
(50.8mm x 69.8mm)
Triple Glazed

Ixx = 3.263 in^4
Sxx = 1.262 in^3

CA-54301

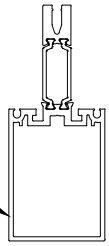

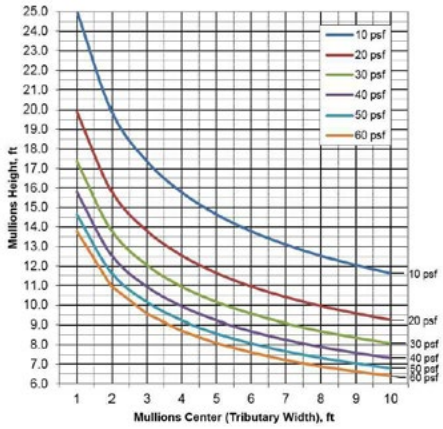

2" x $2\frac{3}{4}$"
(50.8mm x 69.8mm)
Triple Glazed
with HSS $2x1\frac{1}{2}x\frac{1}{8}$"

Ixx = 5.114 in^4
Sxx = 1.628 in^3

HSS $2x1\frac{1}{2}x\frac{1}{8}$"
CA-54301

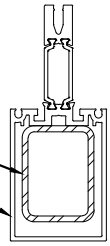

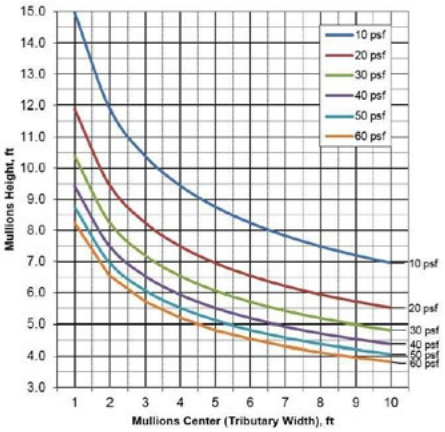

2" x $2\frac{3}{4}$"
(50.8mm x 69.8mm)
SSG

Ixx = 1.090 in^4
Sxx = 0.681 in^3

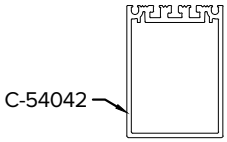

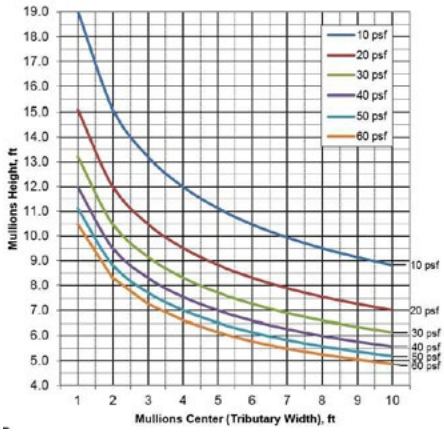

2" x $2\frac{3}{4}$"
(50.8mm x 69.8mm)
SSG with HSS $2x1\frac{1}{2}x\frac{1}{8}$"

Ixx = 2.240 in^4
Sxx = 1.528 in^3

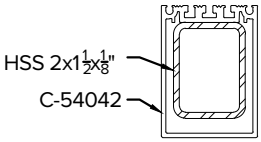

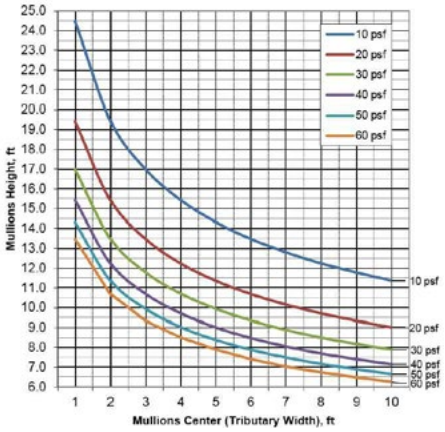

2" x 4"
(50.8mm x 101.6mm)
Double Glazed

Ixx = 4.764 in^4
Sxx = 1.648 in^3

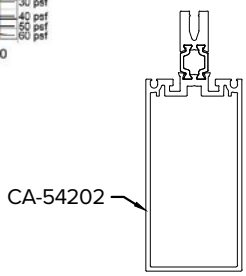

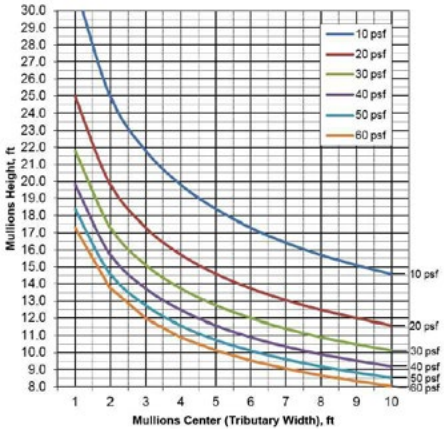

2" x 4"
(50.8mm x 101.6mm)
Double Glazed
with C3x4.1

Ixx = 10.097 in^4
Sxx = 3.336 in^3

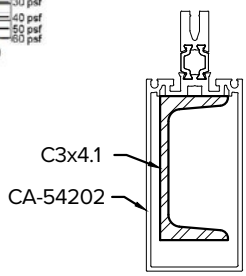

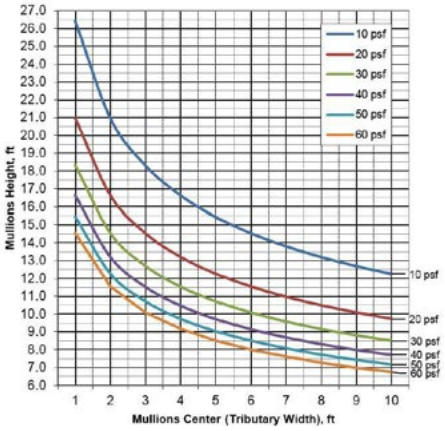

2" x 4"
(50.8mm x 101.6mm)
Triple Glazed

Ixx = 5.985 in^4
Sxx = 1.919 in^3

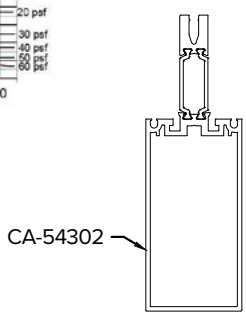

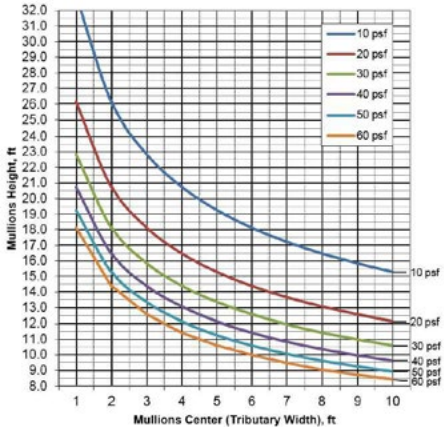

2" x 4"
(50.8mm x 101.6mm)
Triple Glazed
with C3x4.1

Ixx = 11.600 in^4
Sxx = 3.113 in^3

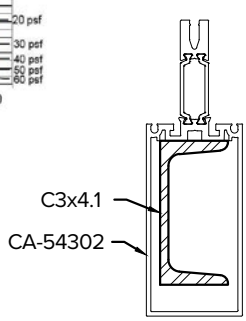

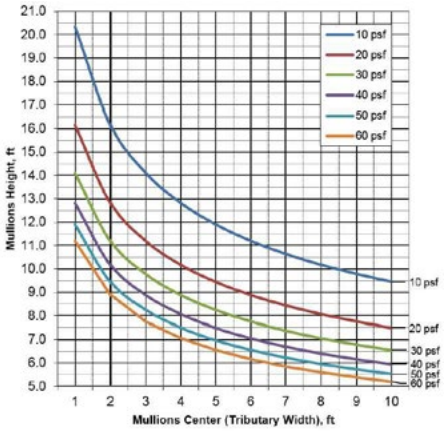

2" x 4"
(50.8mm x 101.6mm)
SSG

Ixx = 2.733 in^4
Sxx = 1.192 in^3

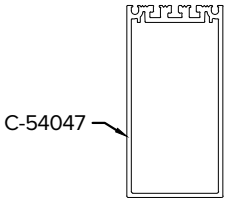

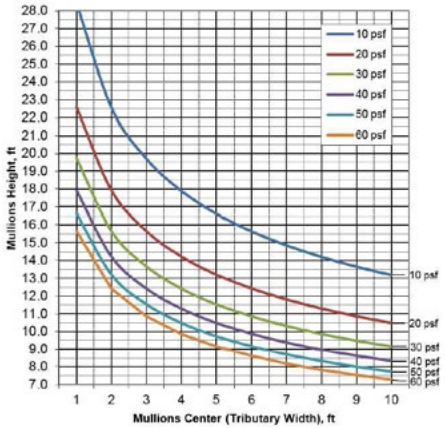

2" x 4"
(50.8mm x 101.6mm)
SSG with C3x4.1

Ixx = 7.477 in^4
Sxx = 3.417 in^3

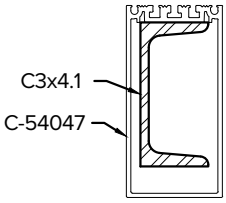

5400 HTP SERIES

WINDLOAD CHARTS

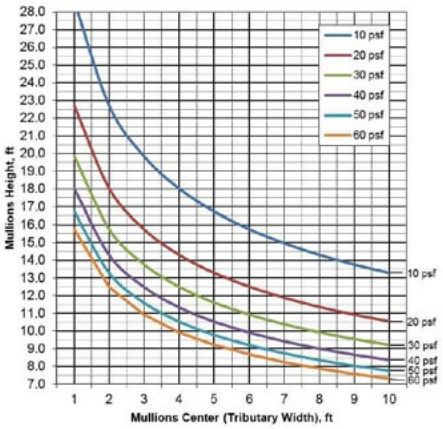

2" x 5"
(50.8mm x 127mm)
Double Glazed

Ixx = 7.615 in^4
Sxx = 2.198 in^3

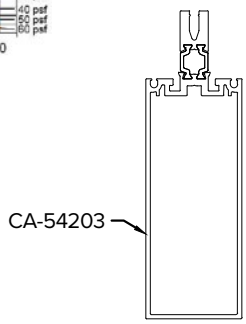

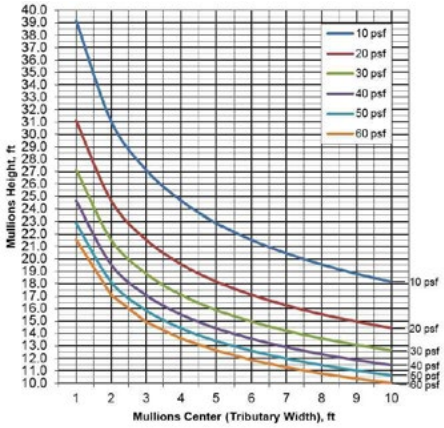

2" x 5"
(50.8mm x 127mm)
Double Glazed
with C4x5.4

Ixx = 19.502 in^4
Sxx = 5.520 in^3

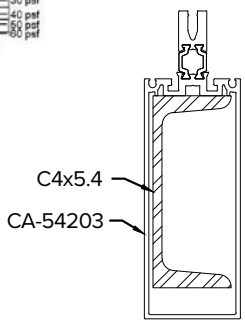

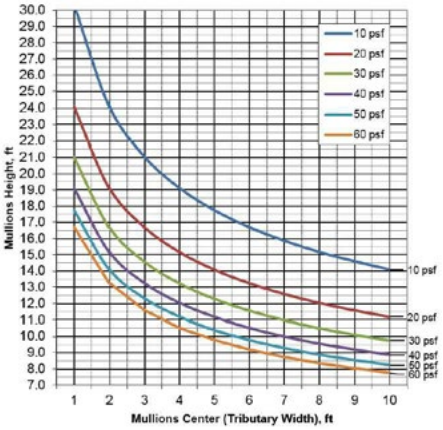

2" x 5"
(50.8mm x 127mm)
Triple Glazed

Ixx = 9.057 in^4
Sxx = 2.513 in^3

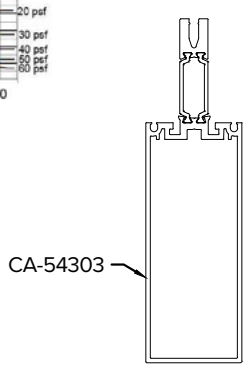

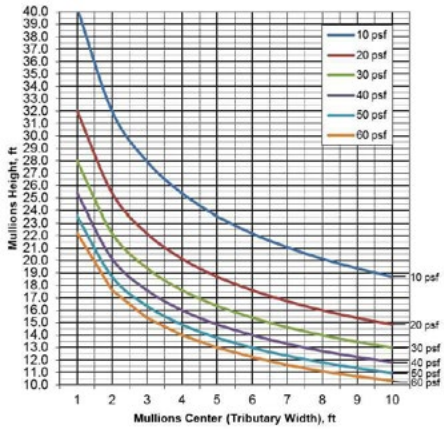

2" x 5"
(50.8mm x 127mm)
Triple Glazed
with C4x5.4

Ixx = 21.265 in^4
Sxx = 5.013 in^3

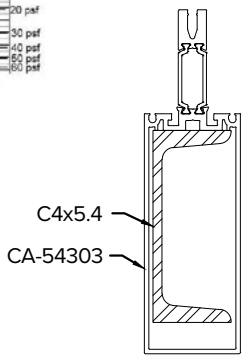

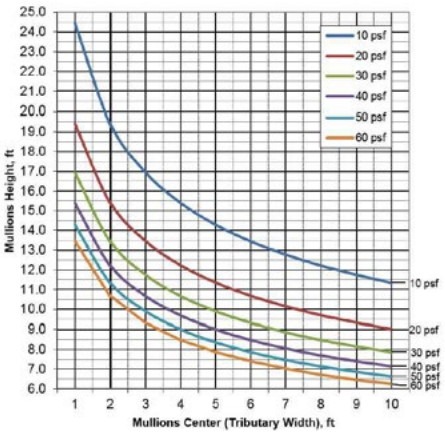

2" x 5"
(50.8mm x 127mm)
SSG

Ixx = 4.745 in^4
Sxx = 1.675 in^3

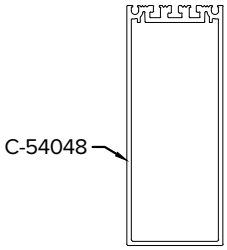

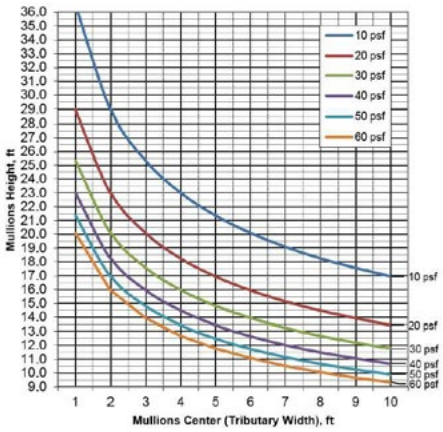

2" x 5"
(50.8mm x 127mm)
SSG with C4x5.4

Ixx = 15.811 in^4
Sxx = 5.869 in^3

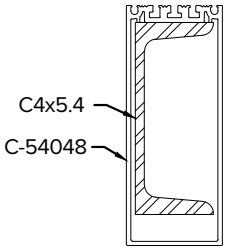

5400 HTP SERIES

PARTS LIST

Part Number	Description	Profile
CA-54201	2" x 2 3/4" (50.8 mm x 69.85 mm) Double Glazed Mullion	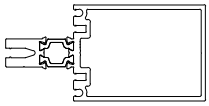
CA-54202	2" x 4" (50.8 mmx101.6 mm) Double Glazed Mullion	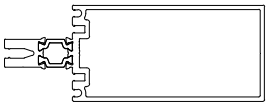
CA-54203	2" x 5" (50.8mm x127 mm) Double Glazed Mullion	
CA-54301	2" x 2 3/4" (50.8mm x 69.85 mm) Capped Mullion- Triple Glazed	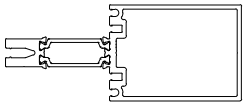
CA-54302	2" x 4" (50.8mm x 101.6 mm) Capped Mullion- Triple Glazed	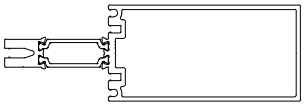
CA-54303	2" x 5" (50.8mm x127 mm) Capped Mullion - Triple Glazed	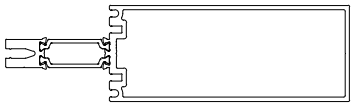
C-54205	2" Veneer Mullion for 6mm Glazing	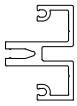

5400 HTP SERIES

PARTS LIST

Part Number	Description	Profile
C-54211	Single Glazing Adaptor for Double Glazed Capped Mullion	
C-54311	Single Glazing Adaptor for Triple Glazed Capped Mullion	
C-54004	2" x $\frac{3}{4}$" Snap Cap (50.8mm x 19.05mm)	
C-54006	2" (50.8mm) Pressure Plate	
CA-55207	Door Adaptor	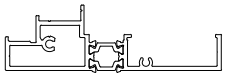
C-54007	Flush Door Adaptor Cap	
C-54208	HTP Flush Door Adaptor Base	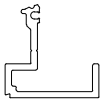

5400 HTP SERIES

PARTS LIST

Part Number	Description	Profile
C-54042	2" x 2-3/4" (50.8 mmx 69.85 mm) SSG Mullion - Doubled Glazed	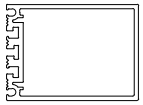
C-54047	2" x 4" (50.8 mm x 101.6 mm) SSG Mullion - Doubled Glazed	
C-54048	2" x 5" (50.8 mmx127 mm) SSG Mullion- Doubled Glazed	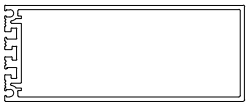
C-55016	90 Degree Corner Adaptor use with C-55042 for 2 $\frac{3}{4}$" application use with C-55047 for 4" application	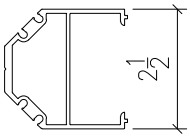
C-55009	90 Degree Corner Adaptor use with C-55048 for 5" application	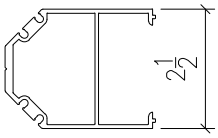
C-55054	90 Degree Corner Snap-On Cover	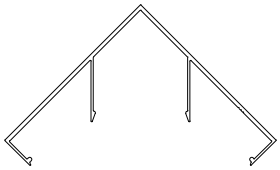
C-55056	90 Degree Corner Pressure Plate (DG)	

5400 HTP SERIES

PARTS LIST

Part Number	Description	Profile
H-54201	Shear Block for 2-3/4" Mullion	
H-54202	Shear Block for 4" Mullion	
H-54203	Shear Block for 5" Mullion	
H-54204	Support Tab for Double Glaze	
H-54304	Support tab for Triple Glaze	
H-55033	Support Tab for Double Glaze SSG Cut to 5"	
H-55343	Support Tab for Triple Glaze SSG Cut to 8"	
C-54043	Single Glazing Adaptor for Double Glaze SSG Mullion	

5400 HTP SERIES

PARTS LIST

Part Number	Description	Profile
C-54343	Single Glazing Adaptor for Triple Glaze SSG Mullion	
C-65006	$1\frac{1}{2}$" x $\frac{1}{2}$" (38.1mm x 12.7mm) 2-pc Door Stop	
C-65007	$1\frac{1}{2}$" x $\frac{5}{8}$" (38.1mm x 15.8mm) 2-pc Door Stop	
H-54210	Neck Bridge for SSG Double Glazed (Silicon)	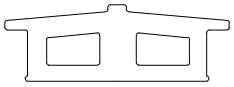
H-54310	Neck Bridge for SSG Triple Glazed (Silicon)	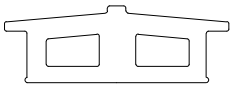
H-54207	Corner Plug for Double Glazed Capped (EPDM Foam) - Notched	
H-54307	Corner Plug for Triple Glazed Capped (EPDM Foam) - Notched	
R-55202	$\frac{1}{8}$" Thermal break	

5400 HTP SERIES

PARTS LIST

Part Number	Description	Profile
R-55104	Interior glazing gasket	
R-55105	Pressure Plate Gasket	
R-54203	$\frac{1}{4}$" Spacer on double glazes profiles for door adaptor, flash adaptor and vents	
R-60187	Mohair for Door perimeter (Use with C-65006/C-65007)	
H-55021	#8 x $\frac{3}{4}$" TEK Screw (Pan-head) Shear Block to Mullion	
H-00034	Pressure Plate Screw	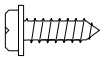
H-00025	#10 x 1 $\frac{1}{4}$" Flat-head Horizontal to Shear Block	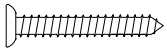

5400 HTP SERIES

FOOT ANCHOR ASSEMBLY
PARTS LIST

5400/5400 HTP Series (2" x 2 3/4" Back Section)

Part Number	Configuration	Size	Compatibility
FA-54201-I	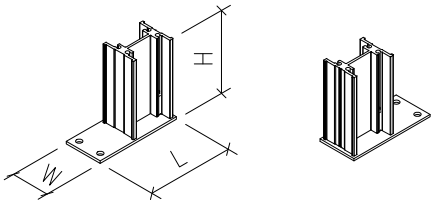 EXT. INT.	L$4\frac{1}{2}$ x W2 x H$4\frac{1}{8}$	5400 HTP (2" X $2\frac{3}{4}$") C-54001 CA-54201 CA-54301 C-54042
FA-54201-F	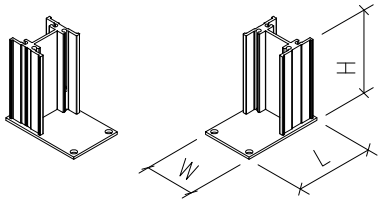 LEFT RIGHT	L4 x W$2\frac{9}{16}$ x H$4\frac{1}{8}$	
FA-54201-T	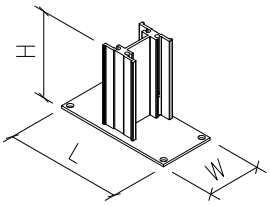 MIDDLE	L6 x W$2\frac{3}{4}$ x H$4\frac{1}{8}$	

5400 HTP SERIES

FOOT ANCHOR ASSEMBLY PARTS LIST

5400/5400 HTP Series (2" x 4" Back Section)

Part Number	Configuration	Size	Compatibility
FA-54202-I	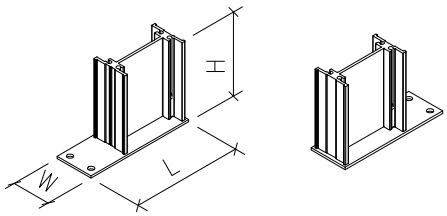 EXT. INT.	$L5\frac{3}{4}$ x W2 x $H4\frac{1}{8}$	5400 HTP (2" X 4") C-54002 CA-54202 CA-54302 C-54047
FA-54202-F	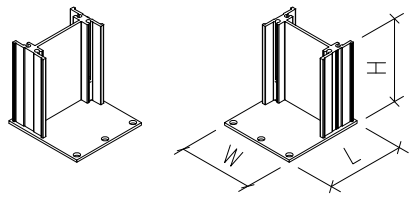 LEFT RIGHT	L4 x $W3\frac{13}{16}$ x $H4\frac{1}{8}$	
FA-54202-T	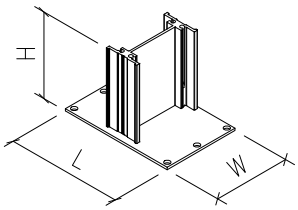 MIDDLE	L6 x W4 x $H4\frac{1}{8}$	

5400 HTP SERIES

FOOT ANCHOR ASSEMBLY PARTS LIST

5400/5400 HTP Series (2" x 4" Back Section)

Part Number	Configuration	Size	Compatibility
FA-54202-I	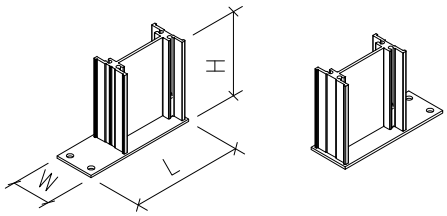 EXT. INT.	$L5\frac{3}{4}$ x W2 x $H4\frac{1}{8}$	5400 HTP (2" X 4") C-54002 CA-54202 CA-54302 C-54047
FA-54202-F	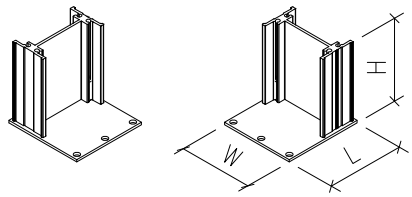 LEFT RIGHT	L4 x $W3\frac{13}{16}$ x $H4\frac{1}{8}$	
FA-54202-T	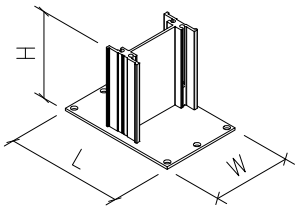 MIDDLE	L6 x W4 x $H4\frac{1}{8}$	